Democratic Socialist Republic of Sri Lanka

Ministry of Defence

National Building Research Institute (NBRI)

Reduction of Landslide Vulnerability by Mitigation Measures Project (RLVMMP)

funded

by Asian Infrastructure Investment Bank (AIIB)

(Loan No: L0124A)

Request for Tender (RFT)

Part 02- Works Requirement

for

Mitigation Design for Failure Locations along Main Line Due to 'Ditwah' Cyclone Line (From Wattegama to Ukuwela) in Matale District (Site No. 254) Under Package 10W of Reduction of Landslide Vulnerability by Mitigation Measures Project (RLVMMP)

Contract No: RLVMMP/WORKS/10 W

Tenderers Name:.....

October 2026

TABLE OF CONTENT

TABLE OF CONTENT ii
LIST OF TABLES v
100 GENERAL 1
101 Arrangement for traffic with safety precautions during constructions or rehabilitation of existing roads 1
102 Control of works 3
103 Control of materials 5
104 General rules for measurement and payment 6
105 Sieve designations 8
106 Facilities for the contractor and general requirements 8
107 Workmanship and quality control 12
108 Standards 13
109 Work executed by the employer or other contractors 13
110 Services 13
111 Maintenance of existing roads 14
112 Protection of the works and requirements to be met before the commencement of construction of new works on already completed works 15
113 Remedial work 15
114 Water supply arrangements 15
115 Setting out, survey and drawings 16
116 Facilities for the Engineer and his staff and Employer – N/A 17
117 Environmental management - REFER SECTION 2000 17
118 Health and safety - REFER SECTION 2000 17
119 Programme of works 17
120 Construction management and staff 18
200 SITE CLEARING 19
201 Clearing and grubbing 19
202 Removal of existing structures 21
203 Utility relocation 23
300 EARTHWORKS 24
301 Side slope excavation or trimming 24
302 Excavation and backfill of structure 26
303 Channel excavation 29
304 Filling work 30
305 Non – explosive blasting operations 33
306 Tension crack sealing 33
400 DRAINAGE CONSTRUCTION 35
401 Cut–off drains, cascade drains and surface drains 35
402 Sub-surface drains (underdrains or trench drains) 36
403 Catch-pits and inlets 37
404 Berm sealing 38
405 Drainage backfill behind earth retaining structures 39

406 Weep-holes for earth retaining structure 40
500 INCIDENTIAL CONSTRUCTION 41
501 Top soiling 41
502 Vegetation Cover 41
503 Gabion walls and mattresses using wire mesh 46
504 Chain link fence 48
505 Drainage well 49
506 Boulder packed wall 53
507 Debris barrier 55
600 CONCRETE AND OTHER STRUCTURES 57
601 Concrete for structures 57
602 Steel reinforcement for concrete structures 64
603 Random rubble masonry 66
604 Plum concrete 68
605 Formwork for structures 68
606 Hot dipped galvanized mild steel/tor steel dowels 70
700 SOIL NAILING AND HORIZONTAL DRAINS 72
701 Soil nailing 72
702 Horizontal drains 92
703 Monitoring 96
800 QUALITY CONTROL OF WORK 98
801 Quality control plan 98
802 Quality control tests during construction 98
803 Material testing 99
900 MATERIAL DETAILS 100
901 Aggregate 100
902 Cement 101
903 Concrete admixture 102
904 Soils 102
905 Geotextiles / Geofabric 102
1000 TESTS FOR QUALITY CONTROL OF MATERIAL AND WORKS 105
1001 Aggregates and soil 105
1002 Cement and concrete 105
1003 Soils 106
1004 Coated Metallic Mesh 106
1100 GROUND ANCHORS 107
1101 General 107
1102 Definitions 107
1103 Materials and components 113
1104 Corrosion Protection 116
1105 Supply and Supervision 117
1106 Assembly 118

1107 Installation 120
1108 Grouting....123
1109 Load Testing 126
1110 Stressing....131
1111 Cutting Off of Stressed Tendons 133
1112 Monitoring 133
1113 Measurement and Payment....134
1200 ROCKFALL PROTECTION 136
1201 Rock Fence 136
1202 Rockfall Drapery Net....143
1300 INSTRUMENTATION AND MONITORING....149
1301 Instrumentation....149
1302 Landslide warning sign boards 159
1303 Monitoring 160
Appendix A Construction Management and Staff 161
Appendix B Rerefernced Documents....163
2000 Environmental, Social, Health & Safety Requirements 165
2001 Environmental and Social Policy....165
2002 Environmental and Social Monitoring....165
2003 Working Conditions and Community Health and Safety 182
2004 Construction contractors' requirement to comply with Site specific environmental, social management and health and safety during the construction phase 187
APPENDIX C – SPECIFICATIONS BY RAILWAY DEPARTMENT OF SRILANKAN (slr) 191
DRAWINGS....200

LIST OF TABLES

Table 105-1: Sieves used in these Specifications 8
Table 502-1: Typical seeds varieties 42
Table 502-2: Material Characteristics for Permanent Erosion Control Product....43
Table 502-3: Hydro seeding quality evaluation criteria 45
Table 502-4:Test methods of permanent erosion control products 46
Table 503-1: The general Specifications of gabions are as follows: 47
Table 504-1: Chain link mesh properties 49
Table 601-1: Concrete Grades....57
Table 601-2: Minimum Cement Content and Water / Cement Ratio 57
Table 601-3: Nominal Mixes....57
Table 601-4: Workability of Concrete....58
Table 601-5: Chloride and Sulphate Contents in Concrete 58
Table 601-6 : Minimum period before striking formwork 63
Table 701-1: Performance requirements for Cement Grout 73
Table 701-2: Coated Metallic Mesh properties for Embedded Grid Beam Method 75
Table 701-3: Coated Metallic Mesh properties for Isolated Nail Head/ Bearing Plate Method....75
Table 701-4: Coated Metallic Mesh properties for Non-Embedded Grid Beams 76
Table 701-5: Grading limits for combined aggregates 77
Table 701-6: Boundary Rope Properties 77
Table 701-7: Coir Mesh Properties 78
Table 701-8: Suitability Test – Load Increments and Minimum Periods of Observation....86
Table 701-9: Acceptance Test – Load Increments and Minimum Periods of Observation....87
Table 702-1: Pipe Diameters and Wall Thickness 93
Table 802-1: Quality Control Tests and their Frequencies....98
Table 901-1: Permissible maximum salt content in aggregate 100
Table 901-2: Grading Limits for Coarse Aggregate....100
Table 901-3: Preferred Grading for Fine Aggregate for Concrete 101
Table 904-1: Material Characteristics for Filling - Type I and Type II....102
Table 905-1: Physical and filtration properties of Geo-textiles....104
Table 1001-1: Quality Control Tests for Aggregates and Soil 105
Table 1002-1: Quality Control Tests for Cement....105
Table 1002-2: Quality Control Tests for Concrete 105
Table 1003-1: Quality Control Tests for Soils 106
Table 1004-1: Quality Control Tests for Coated Metallic Mesh 106
Table 1103-1: Performance Criteria for Grease/Wax Corrosion Inhibiting Compound 116
Table 1108-1: Performance requirements for Cement Grout 123
Table 1108-2: Minimum Grout Testing Frequency (Only for Anchors)....124
Table 1109-1: Minimum Load Testing Frequency (Only for Anchors)....126
Table 1109-2: Recommended Load Increments and Minimum Periods of Observation for Proof Tests 127
Table 1109-3: Recommended Load Increments and Minimum Periods of Observation for Suitability Tests....128
Table 1109-4: Recommended Load Increments and Minimum Periods of Observation for Acceptance Tests..128
Table 1109-5: Limiting Values of Load Loss with Time 130
Table 1201-1: Properties of Primary Rope Net 136
Table 1201-2: Properties of Secondary Net 137
Table 1201-3: Properties of Wire Ropes 137
Table 1201-4: Properties of Posts....137
Table 1202-1: Properties of Wire Ropes 143
Table 1202-2: Installation of Wire Rope Grips 144
Table 1301-1: Specifications for the inclinometer sensor and data logger....151
Table 1301-2: Specifications for the in-place inclinometer sensor 152
Table 1301-3: Specifications for the extensometer cable....153
Table 1301-4: Specifications for the data logger and readout device for extensometer....153
Table 1301-5: Specifications for automated rain gauge 154
Table 1301-6: Specifications for night vision long range camera (Wired/Wireless) 155

100 GENERAL

101 ARRANGEMENT FOR TRAFFIC WITH SAFETY PRECAUTIONS DURING CONSTRUCTIONS OR REHABILITATION OF EXISTING ROADS

101.1 General

The Contractor shall provide and maintain for the period of construction, traffic control and safety devices including Traffic Sings, Barricade Boards, Traffic Cones, Lighting Devices, etc., at all locations where work is in progress in accordance with Part II of the "Manual of Traffic Control Devices for Road Work Areas, Road Development Authority (Second Edition, April 2004)" or their latest editions.

Material and equipment temporarily stored on, or adjacent to, the existing roadway shall be so placed, and the work at all times shall be so conducted as to cause minimum disruption to the traveling public. Warning signs and barrels will be required to separate the Contractor's material and equipment from the public.

The Contractor will not be permitted to have excavations open on sides of the road at a particular location such that there is a step adjacent to public traffic which may create a danger to traffic, i.e. the excavation/trimming for slope rectification.

The maximum length of one-way working controlled by stop or go boards for flagmen shall be 100 m. This length may be further reduced if visibility is reduced at bends on increased where appropriate at the Engineer's discretion.

During construction which require one-way-traffic, the Contractor shall be responsible for the removal of break down vehicles including vehicles damaged in accidents and shall maintain one-way uninterrupted traffic flow at all times.

As an alternative or in addition to one-way working, traffic diversions may be arranged where this is feasible. Such diversions shall be approved by the Engineer in conjunction with the Sri Lanka Traffic Police. The Contractor shall also arrange for the Traffic Police to be in attendance for traffic management. The Contractor shall be responsible for the provision and maintenance of adequate signing for the duration of any diversion.

The Contractor shall be responsible for providing the adequate number of flagmen, wherever, temporary diversions or at sections where part of the road is used for the purpose of carrying out of permanent work.

101.2 Using Part of the Road

Part of the carriageway shall be kept open to traffic, while improvement works such as slope stabilization of the unstable or failed cut slope areas is being carried out in the other part, provided the part kept open to traffic is adequate for the purpose. Shoulder area of the road shall not be used for traffic diversion during rectification works.

101.3 Temporary Diversions

The Contractor shall construct temporary diversion ways wherever construction of the Works will interrupt existing public or private roads or rights-of-ways. Diversions shall be constructed in advance of any interference with the existing rights-of-way, and the subsequent traffic management, safety and control shall be in accordance with the paragraphs of this Clause 101 and/or as directed by the Engineer.

Where traffic management schemes are shown in the Contract Drawings they are for guidance and bidding purposes only. It is Contractor’s role responsibility to plan and design the necessary traffic diversions in the most efficient way possible in order to enable him to complete the Works within the Contract Period, with the minimum disruption of normal traffic flow, and absolute minimum impact on the Works, third parties, and environment.

The standard of construction and lighting of diversions shall be suitable in all respects for the volume, size and speed of traffic using the existing way. The level of lighting shall be as indicated on the Drawings or as directed by the Engineer and shall satisfy the requirements of the concerned local authorities prior to being approved by the Engineer. The width and number of lanes shall be sufficient to maintain an acceptable traffic flow commensurate with existing conditions. In any case, the minimum width of the traffic lane shall be 3.5 m. It is the responsibility of the Contractor to obtain prior permission of the relevant Local Authority to open detours and the use of local authority roads.

Permanent roads used as temporary detour roads shall be signed and marked in compliance with detour road requirements whilst under detour road status. Should this road marking and signing be of a temporary nature, the Contractor shall ensure that its removal will not impair the quality of the Permanent Works.

Under no circumstances will the Contractor be allowed to open any new carriageway for detour traffic with permanent road markings which are not in compliance with the accepted detour markings.

The minimum pavement construction of any diversion road, unless otherwise specified, shall not be less than 40mm of bituminous paving course on 150 mm of primed granular road base. Paving may be laid directly on primed subgrade only with the Engineer's prior approval.

The Contractor shall be responsible for the maintenance of the diversion roads during their use of them and incase detour road is an existing road, the Contractor shall be responsible for maintaining and repairing the pavement in a satisfactory condition to the Engineer and such local authorities.

In urban areas, the traffic diversions shall be illuminated with suitable lighting. In rural or other areas, where no street lighting exists, all signing shall be reflectorized, and all changes in direction shall be floodlit at night to an intensity approved by the Engineer.

101.4 Traffic Safety and Control

The Contractor shall, after consultation with the Engineer, all the concerned Local Authorities, and Police, prepare a scheme of traffic management for carrying out the Works. Such proposals shall be submitted to the Engineer for his approval, together with written approval no-objection certificates from the concerned authorities, not less than 30 days before the planned implementation of each proposal.

The Contractor shall not commence any works affecting any public highway until all approved traffic safety measures conforming to the Engineer's prior approval have been fully implemented to the satisfaction of the Engineer.

The Contractor shall take necessary measures for the safety of traffic and third parties by providing, erecting and maintaining all signs, lamps, barriers, traffic control signals, road markings, etc. in a clean and legible condition, and shall position, re-position, cover or remove them as required by the progress of the Works. The barriers shall be strong. Red lanterns or warning lights shall be mounted on the barriers at night and shall be kept lit till sunrise. If the Contractor fails to comply with these requirements, the Engineer shall order a third party to rectify the shortcomings and shall recover the cost of such works from the Contractor.

101.5 Measurement and payment

a. Measurement

All the costs related to the implementation and execution of the Traffic Safety and Management Plan shall be measured monthly. The quantity of work for payment during the month shall be assessed by the Engineer based on the Contractor's claim, supported by a checklist to show key activities carried out. Suitable weightings may be agreed on key activities between the Engineer and the Contractor to indicate the monthly payment based on performance.

Maintenance and repair of temporary diversion roads, if any, shall be measured for payment as a Provisional Sum.

b. Payment

(i) Payment shall include all costs necessary and required for the proper implementation of the Traffic Safety and Management Plan in full accordance with the requirements of this Specification Section, including periodic up to date submittals.

(ii) Payments shall be made monthly according to the Traffic Safety and Management Plan. The Contractor shall maintain the record book of the monthly activities and prepare a checklist for payment.

(iii) The Engineer may at any time withhold payments if (in the opinion of the Engineer) the Traffic Safety and Control is not being provided in due compliance with the requirements and procedures of this Specification.

Provision and maintenance of temporary diversion roads, if any payment shall be made as per a Provisional Sum.

Provisional Sum is allocated in the Bill of Quantities for Management, Safety & Control & Temporary Diversion of Traffic, including provision of a general traffic management plan. The amount allocated for this Provisional Sum shall not be exceeded, without prior approval of the Engineer.

Payment shall be based on the rates and sums assessed and agreed by the Engineer for the completed works to the satisfaction of the Engineer, which shall include full compensation for providing all materials, labour, tools, equipment and incidentals necessary to carry out the work.

The Contractor will be entitled to additional overhead and profit as stated in the BOQ on top of the actual cost, in this regard.

Pay Item	Description	Pay Unit
101(1)	Management, Safety & Control & Temporary Diversion of Traffic, including provision of a general traffic management plan	Provisional Sum
101(2)	Maintenance and Repair of temporary diversion roads, if any	Provisional Sum

102 CONTROL OF WORKS

102.1 Authority of the Engineer

The Engineer shall decide on all matters which may arise including the following:

1. The quality and acceptability of materials furnished
2. Rate of progress of work
3. Interpretation of, and change to, Plans and Specifications
4. Acceptable fulfilment of the Contract on the part of the Contractor
5. Type of machinery and equipment to be used

Decisions regarding the above will be based on stipulations given in the Contract Documents and sound Engineering practice taking into consideration all factors bearing on the issue including all regulations, instructions and guide lines established by the Employer organization for the administration of the Contract.

In this regard the Engineer shall be free to exercise such powers as are conferred on him by the General Condition of Contract.

102.2 Conformity with Plans and Specifications

All works performed shall be in accordance with these Specifications and in conformity with lines, grades, Cross-sections and dimensions shown on plans and working drawings. All materials furnished shall also be in conformity with the Specifications. In the event the work performed and/or the materials furnished are not in conformity with the Plans and Specifications and have resulted in an inferior or unsatisfactory product, such work or material shall be removed and replaced or otherwise corrected by and at the expense of the Contractor.

a. Field Controls

Unless otherwise specified, the Contractor shall set out such initial construction stakes and bench marks that will serve as the field controls for the construction work and obtain the approval of the Engineer for the same. No work shall begin till such bench marks, stakes, setting out points, reference points and all control points are certified as corrected by the Engineer or his representatives.

b. Submission

Unless otherwise specified, at least 28 (twenty-eight) days before the commencement of the works, the Contractor shall submit Working Drawings and Method Statements for the Engineer's approval.

The Method Statements shall satisfy the requirements of the Contract and the following:

- Construction method
- Quality control procedure
- Measurement method
- Safety precautions
- Work schedule
- Temporary works plan
- Plan for disposal of surplus soil
- Plan for waste disposal
- Environmental protection measures

The plan for disposal of surplus soil, the plan for waste disposal and environmental protection measures shall comply with the laws of Sri Lanka.

c. Temporary Works

The Contractor shall furnish construction yards which shall be flat and suitably graded and covered with gravel to avoid any pooling of water and getting muddied. Construction yards shall be located at every Location and shall be prepared and facilitated with the Contractor's office with furniture, equipment, consumables, a stockyard for various materials and a parking space, etc. On completion of the Project, the construction yards, including all facilities, shall be demolished and the area shall be properly restored and returned to the legal owner.

Unless otherwise instructed by the Engineer, upon completion of the Works, the Contractor shall remove all temporary facilities, including temporary roads, clean up and restore the land and vegetation to the satisfaction of the Engineer.

The Contractor shall include the temporary work plan, design calculations, and working drawings in the Method Statements.

102.3 Construction Programming

The Contractor shall program his work to reduce as far as is practicable disruption to all road users and users of other institutes in the vicinity during construction of the Works. Moreover, the Contractor shall maintain traffic control measures and other safety measures as per the ESMP to ensure the safety of users and infrastructure at all times. The Contractor shall provide with his time /location program and detailed construction schedule, a list of proposed working area with relevant location showing where he intends to commence his slope rectification work. The Engineer shall approve these locations without undue delay subject to compliance with this Clause and the Contractor will then be given access to these sections. Subsequent sections shall be requested and the Engineer shall approve them in accordance with the above procedure.

Where relevant the Contractor shall also provide with his program, his proposal for soil nailing, indicating the nailing sources and coated metallic mesh, etc., his suppliers of above products, the program of supplying of them and his resources schedule and their time of availability at site. He shall also provide a complete method statement explaining as to how be commences and proceeds with all major items of work in his program.

If required, the Contractor shall take into consideration, the works to be completed by him in order to commence the works of the Service Agencies that would be made available to him by the Employer, in preparing his Time/Location program.

The Contractor shall ensure that sufficient labour, equipment and material is available to complete the work. Before any subsequent section is made available to the Contractor, the Contractor shall demonstrate that he has sufficient labour, equipment and material available in approved stocks to proceed with work without delay or gaps once the Work commences. If in the opinion of the Engineer, this is not demonstrated the Contractor shall not be permitted to start work on the subsequent section.

102.4 Compaction – General

Compaction of materials shall be carried out in layers of uniform thickness using approved compaction equipment, including combinations thereof if required by the Engineer to achieve the specified compaction.

During rolling, the top of the layer being rolled shall be checked for levels and any irregularities in these regards corrected by scarifying the material in the affected area and by removing or adding materials and continuing with the rolling until the entire area being rolled has been brought to a state of uniform and desired compaction.

102.5 Mixing and Control of Moisture Content before Compaction

Before compaction is commenced, each layer of un-compacted material shall be brought to a state of uniform composition, texture and moisture content by thorough mixing and addition of water or drying as required. The Contractor shall be deemed to have taken account of the fact that the materials encountered may vary widely with respect to their in-situ moisture contents and the moisture contents at which the materials are to be compacted is to be specified separately for each type of material. Accordingly, the materials may have to be wetted by adding water or dried to the required degree, along with intimate mixing of the entire mass of the materials.

102.6 Compaction Equipment

Mechanical equipment shall be used for compacting materials by rolling, tamping and watering the materials (if needed) before compaction. For other operations such as spreading, mixing and shaping, mechanical equipment

only or a combination of mechanical equipment and manually operated tools and equipment shall be used. The choice of equipment and the procedure of their use shall be subject to the approval of the Engineer, upon his being satisfied about their effectiveness on the basis of trial compactions.

It shall be understood by the Contractor that different type of materials are likely to require different kinds of compaction equipment, including successive applications thereof, to achieve the specified degrees of compaction and the Contractor shall keep available a fleet of compaction equipment of the requisite kinds, sizes and numbers.

For compacting along narrow strips, for example in structure backfilling such as behind retaining walls, appropriately sized purpose made compacting equipment will be required and the same shall be provided by the Contractor.

All equipment shall be of modern construction, by established manufacturers, of proven efficiency, and shall be operated and maintained at all times by skilled personnel in a manner acceptable to the Engineer.

102.7 Measurement and Payment

No separate payment shall be made for compliance of items under this section. Payments shall be deemed to be included in the Contractor's rates and prices.

103 CONTROL OF MATERIALS

103.1 Source of Supply and Quality Requirements

The Contractor shall be responsible for the provision of all materials required to construct the Works. All materials salvaged or removed from the Works remain the property of the Employer, and the Contractor shall be responsible for the cost of replacement in the event of their unauthorized use or removal.

Quarry and borrow pit (if required) areas identified by the Employer as being likely to provide material shall be inspected and tested by the Contractor and it is the Contractor's responsibility to satisfy him as to the quality and quantity of suitable material to be gained from the identified sites. The Contractor is deemed to have checked carefully the availability of suitable material in sufficient quantities in preparing his bid and to have satisfied himself fully of the characteristics of the materials and the suitability of his equipment and methods of working on which he has based his rates and prices.

No claims relating to the quantity or quality of material at identified quarry or borrow areas shall be considered by the Employer.

The Contractor shall be responsible in obtaining at his own cost all permissions and licenses for openings up and operating all quarries and borrow areas and shall organize his method of operations so that only materials of a type and quality approved by the Engineer shall be selected for use in the Works.

The Contractor is at liberty to select and use material from his own sources provided that the requirements of this section are fully met.

103.2 Storage of Materials

Materials shall be so stored as to ensure the preservation of their quality and fitness for the work. Stored materials shall be located so as to facilitate their prompt inspection. Approved locations within site premises may be used for storage purposes. All storage sites from which the stored materials have been removed shall be restored to their original condition by the Contractor at his expense.

In case of materials, which need stockpiling for storage and measurements, these shall be stockpiled on level areas and to standard shapes so as to facilitate easy measurements and computations of volumes.

103.3 Handling of Materials

All materials shall be handled in such a manner as to preserve their quality and fitness for the work.

103.4 Approval of Sources of Materials

The sources of the materials shall be selected by the Contractor but approved by the Engineer before the materials are used on the Site. For this purpose, the Contractor shall furnish all relevant test data for representative samples from each source area as desired by the Engineer and also afford opportunities for the Engineer to visit the sources areas.

Notwithstanding approval of sources of materials, materials brought to Site for use in the Works shall be subject to acceptance or rejection by the Engineer based on quality control tests to be performed before use in construction.

The Contractor shall submit mill sheets, test reports or manufacturer's certificates on each material for the Engineer's approval at least 21 (twenty-one) days before the commencement of works or procurement of materials whichever occurs earlier. The Contractor shall not commence the work or purchase the material without the Engineer's approval. In case the Contractor failed to submit appropriate documents satisfactory to the Engineer and necessary for the approval by the Engineer by the aforesaid period, the Engineer's approval will be issued 21 days after receiving satisfactory documents from the Contractor and the consequences of the delay incurred from such situation shall be borne by the Contractor.

103.5 Stockpiling of Materials

Unless otherwise permitted by the Engineer, natural gravels brought from borrow pits shall not be loaded directly from the borrow area for use in the Works but shall first be stockpiled. Such stockpiles shall be tested and approved by the Engineer before the material comprising them may be used in the Works.

All materials brought to site shall be stockpiled and stored carefully at approved locations and in a systematic manner so as to prevent deterioration or mixing of different materials or contamination. Materials which have suffered contamination or deterioration due to improper storage shall not be used in the Works and shall be removed from the stockpiling area.

The materials shall be free from foreign, organic or any other deleterious substances such as vegetation and perishable matters, or any other substance which in the opinion of the Engineer may affect placing, mixing and compaction of the material or adversely affect the future performance of the Works. Material may be tested in stockpiles by the Engineer to check suitability for use in the Works.

Stockpiling of material is not permitted in the landslide body, head/scar or any area that is decided by the Engineer or the Employer as at risk of activating landslide or slope failure.

103.6 Temporary Stockpiling of Materials

Where the work program is such that materials cannot be placed directly in their required position, or where mixing of two or more materials is required to meet the requirements of the Specification for a material, the Engineer may authorize their removal into temporary stockpiles. Stockpile sites shall be to the Engineer's approval and shall be prepared by clearing and grading followed by compaction.

The material shall be stockpiled in successive layers of approved thickness over the full stockpile area to the approximate dimensions required by the Engineer and shall subsequently be reloaded and placed.

103.7 Payment

No separate payment shall be made for items under this section. Payment shall be deemed to be included in the Contractor's rates and prices.

104 GENERAL RULES FOR MEASUREMENT AND PAYMENT

All measurements shall be recorded in the metric system unless otherwise specified. Different items of work shall be measured in accordance with the procedures laid down in the relevant sections of Specifications read in conjunction with the relevant stipulations in the Contract. In respect of lump sum contracts, however, the procedure specified in the contract shall be adopted.

All measurements, unless otherwise specified, shall be recorded and computed nearest to the following units.

(i)	Length and breadth	10 mm
(ii)	Areas	0.01 sq.m.
(iii)	Cubic contents	0.01 cu.m.
(iv)	Height, depth or thickness of structural members	5 mm
(v)	Height, depth or thickness of earthwork measured by tape	10 mm
(vi)	Height, depth or thickness of earthwork measured with level and staff	5 mm

In case of any difference between the above units and those specified under the relevant items of Specifications the latter shall prevail.

The measurement of materials stock piled shall be recorded for arriving at the cubic volume contents by measuring the length, width and height of piles. The quantity shall be calculated in Cubic meter (m^3) corrected to two places of decimals.

Unless stated to the contrary, any thickness, area or volume in any items of the Works shall be measured only on finished work after compaction.

The payments for the various items shown in the Bill of Quantities shall constitute full compensation for performing all of the requirements of the Contract for the item of work as specified including furnishing all necessary materials, labour, tools, equipment, supplies, testing, and incidentals.

104.1 Lead of Materials

Lead or transport distance where applicable shall be measured over the shortest practicable route and not necessarily the actual route taken for transport. The decision of the Engineer shall be final in this regard.

(i) Carriage by manual labour shall be measured in units of 30 m.

(ii) Carriage by animal/mechanical transport shall be reckoned in unit of 1.00 km. Distance of 0.50 km. or more shall be taken as 1.00 km. and distance of less than 0.50 km. shall be ignored. However, when the total lead is less than 0.50 km., it will not be ignored but paid for separately in stages of 30.0 m subject to the condition that the rate worked on this basis does not exceed the rate for 1.00 km by mechanical transport.

(iii) The measurements of materials stockpiled and measured as specified at Section 104 above shall be the basis of payment for arriving at the transport charges, in respect of materials transported unless otherwise specified.

(iv) The rate for transport is inclusive of all operations including loading, transport, unloading and piling.

a. Haulage

No haulage on materials shall be measured or paid. The cost of haulage is deemed to be included in tendered rates for supply of materials in accordance with Condition of Contract.

104.2 Measurement for Area and Volume Based Payment

a. Area Basis

When measurement of Clearing, Grubbing, Removing the objectionable material in designated areas is stipulated to be made on an area basis, the thickness of the layer shall be checked at regular intervals by level and staff or by other approved means, as directed by the Engineer. Dimensions used to determine area shall be measured on a plan area basis.

b. Volume Basis

The finished thickness of slope cutting or trimming to be paid on a volume basis shall be computed in the following manner, unless otherwise specified.

Initials levels shall be recorded before the commencement of the work at a grid of points normally not exceeding 5.00 m, Centre to Centre, longitudinally and at the profile changing points not exceeding 2.00 m transversely. Transverse levels however, shall include full width of the cross-section according to design. Final levels shall be similarly recorded at the same grid points after completion of each item of work listed separately for payment. The average thickness of the removal in any area shall be the mean of the difference of initial and final levels in that area but limited to the thickness stipulated in the relevant drawings, designs and Specifications.

104.3 Scope of Rates for Different Items of Works

In the absence of directions or stipulations to the contrary, the rates are to be considered as full compensation for all the operations, and the rates are to be considered as the full inclusive rates for finished work covering all labour, materials, wastage, temporary works, overhead charges and the obligations and risks arising out of the Condition of Contract.

104.4 Facilities for Verification of Measurements

The Contractor shall provide all the necessary facilities for checking and verification of the measurements at all stages of work, to the officers of the Engineer or Employers organization.

104.5 Selection of Pay Items

Selection of pay items given under each section will depend on the method of measurement adopted on the Contract.

104.6 Sub Divisions within Pay Items

Where sub divisions within pay items become necessary, due to variations of type of material, thickness of layer, etc., letter suffixes in alphabetical order shall be used in the BOQ to denote the sub divisions within each such pay item. These letter suffixes shall be incorporated alongside the number given within the bracketed portion of the pay item number.

105 SIEVE DESIGNATIONS

The sieve size that the generally used in this Specification for grading of soils and aggregates are as stipulated in column 1 of Table 105-1, which also conforms to BS. It should be noted that sieves given therein are the metric equivalents for the original sieves in imperial units given in column 2 of Table 105-1, which conforms, to ASTM E11.

Table 105-1: Sieves used in these Specifications

Sieve Sizes used in these Specifications (BS metric sieves)		Corresponding Original sieves in imperial units Confirming to ASTM	
mm (1)	**µm**	**Inch (2)**	**Sieve number**
75		3	
63		2 ½	
50		2	
37.5		1 ½	
28		1	
20		¾	
14		½	
10		3/8	
6.3		¼	
5			4
2.36			8
1.18			16
	600		30
	300		50
	150		100
	75		200

Even though some of the above sieves are not in the standard ISO series they are selected for the purpose of these Specifications due to their common usage in Sri Lanka

106 FACILITIES FOR THE CONTRACTOR AND GENERAL REQUIREMENTS

106.1 Performance Security

The Contractor shall provide a Performance Security for proper performance of the Work, in accordance with the General Conditions of Contract.

a. Measurement

Performance Security shall be measured as a Lump Sum item for the cost of providing the required Performance Security.

b. Payment

Payment shall be made as a Lump Sum and shall be payable when the Contractor has provided satisfactory Performance Security, supported with proof of Premium payment.

Pay Item	Description	Pay Unit
106.1(1)	Allow for Cost of Providing Performance Security	Lump Sum

106.2 Insurances

The Contractor shall provide all insurances for the performance of the Work, including at least, those required under the General Conditions of Contract except where specifically allowed for under other items.

The Contractor shall take all necessary measures such as photographic and other records of the third party properties adjacent to the work which, in his opinion, may be affected during construction activities.

Insurance policies shall be maintained and valid through the period of performance of the Contract and shall be extended when and as necessary.

a. Measurement

Insurance shall be measured as a Lump Sum item for the cost of providing all the insurances required during the period of performance of the Contract.

b. Payment

Payment shall be made as a Lump Sum and shall be payable when the Contractor has provided all acceptable and satisfactory insurances valid for the Contract period. Payment shall be made on submission of the original Insurances, policies supported with confirmation of reinsurance if any and proof of payment of premium.

Pay Item	Description	Pay Unit
106.2(1)	Allow for Cost of Providing Insurances	Lump Sum

106.3 Advanced Payment Guarantee

The Contractor shall provide an Advanced Payment Guarantee for the purpose of the Work issuing an interest free advanced payment, in accordance with the General Conditions of Contract.

a. Measurement

Advanced payment guarantee shall be measured as a Lump Sum item for the cost of providing the required Bank Security.

b. Payment

Payment shall be made as a Lump Sum and shall be payable when the Contractor has provided satisfactory Advanced Payment Guarantee, supported with proof of Premium payment.

Pay Item	Description	Pay Unit
106.3(1)	Allow for Cost of Providing Advanced Payment Guarantee	Lump Sum

106.4 Mobilization, Maintenance and De-mobilization of Contractor's Facilities and Plant/Equipment

a. Description

The Contractor shall be responsible for leasing or renting any extra land or building for the purpose of establishing his site offices and establishment of housing, stores, testing laboratory, temporary yards, equipment, plant and workshops and for all temporary works and for the reinstatement of such land or buildings on completion of the Contract, to the satisfaction of the Engineer and the owners of such lands / equipment.

The Contractor shall obtain the prior approval of the Engineer for the plans and sitting of his office and site establishment and for the leasing of any additional land before such land is leased. He shall indemnify the Employer against all claims and charges in respect of the occupation, use and reinstatement of leased land.

The Contractor's site establishment shall include all his offices, housing, stores, testing laboratory, plant, equipment, workshops etc. but not limited to these

- Furnish all resources (incl. equipment) required to complete the specified work
- Establish offices, testing laboratory as required under, housing, workshops and stores for the Contractor
- Provide laboratory equipment
- Install electrical power supply with sufficient capacity and a standby generator of similar capacity for use exclusively as a backup unit for this purpose
- Install water supply
- Provide access roads
- Charges not otherwise itemized

The Contractor shall provide and maintain the offices, testing laboratory including their contents, access roads and hard standing as required by him in order that he may carry out his obligations under the Contract.

On completion of the Project, the following shall become property of the Contractor:

- All the furniture in the offices, laboratory, housing, workshops, stores and the standby generator of the Contractor.
- Testing equipment of the laboratory.

b. Measurement

Site establishment of the contractor including his site office and reinstatement of land shall be measured as a lump sum item as indicated in the Bill of Quantities. Payment shall be made as following order;

1. 35% upon provision or erection of the Contractor's site establishment including office, testing, laboratory, housing, workshops, access roads, stores and equipment, etc., with all finishes and fittings.
2. 20% upon furnishing laboratory with equipment and furniture.
3. 45% upon establishment of plant and equipment which is required for the work. For the purpose of payment certification, the Contractor shall provide his schedule of plant and machineries to be mobilized.

Maintenance of site establishment of the Contractor shall be measured as the number of months during which maintenance work is carried out.

c. Payment

Payment for the Contractor's site establishment under 106.4 above shall include for:

- Payment for leasing of any land required for his offices, laboratory, hard standing and access roads and temporary buildings and reinstatement of such land.
- Provision and erection of the buildings, including any necessary foundations, refurbishment, improvements and equipping.
- Provision of access roads, hard standing, fences and gates.
- The connection of telephones, electrical, sewerage and water supply, including all costs associated with their provision and use.
- All furniture, stationery and equipment necessary for the proper execution of the work.

Payment for removal of the offices of the Contractor shall include (if applicable),

- The removal of the buildings including its foundations.
- The removal of access roads, hard standing, fences and gates.
- The disconnection of telephones, electrical, sewerage and water supply including all costs associated with their use.
- The reinstatement to the satisfaction of the Engineer of the land used for the office, laboratory, hard standing and access road.

Maintenance of the office of the Contractor shall include for labour, materials and equipment necessary to ensure that they are maintained regularly and properly cleaned.

Pay Item	Description	Pay Unit
106.4(1)	Mobilization of Contractor's Facilities and Plant/Equipment	Lump Sum
106.4(2)	De-mobilization of Contractor's Facilities and Plant/Equipment	Lump Sum
106.4(3)	Maintenance of Site Establishment for the Contractor	Month

106.5 Progress Reports

Monthly progress report shall be submitted by the Contractor to the Engineer and the Employer.

A minimum of thirty-six (4 sets) photographs shall be taken by the Contractor each month to record the progress of the Works. Photographs shall be 200 mm x 150 mm, in colour, and shall be marked with date of exposure, and location. Where conventional photography is used, the negatives shall be supplied to the Engineer. High resolution digital photographs (minimum 10 Mb pixel format) will be acceptable, in which case a digital copy (pen drive) shall be supplied in lieu of negatives.

a. Measurement

Progress report and photographs shall be measured by the number of months or part thereof.

b. Payment

The rate shall include for:

- Taking the photographs;
- Preparation of progress report;
- Development of the film and prints;
- Annotating and binding;
- Delivery of the specified number of prints to the Engineer /Employer;
- Delivery of electronic copies of the progress report to the Engineer by means of pen drives;
- Delivery of negatives or in the case of digital photography, submitting or transferring electronic copies of the prints to the Engineer by means of pen drives or otherwise.

Pay Item	Description	Pay Unit
106.5(1)	Progress Reports	Month

106.6 Project Name Boards/ Inauguration Plaque and Location Indication Plaque

The Name Boards shall be erected to the following requirements;

Face plate size not less than 2.5 m by 2.0 m containing color messages and logos to include project name, name of the Employer, name of the Engineer, name of the Contractor, name of the Funding Agency and anticipated completion date in all three languages (Sinhala, Tamil and English). The board shall be erected on double post supports with concrete foundations. The board shall be made of galvanized steel of gauge 18. The board shall be erected with the bottom of the board at a minimum of 2.3 m above the adjacent ground and clear of motor traffic.

The Project Inauguration Plaque and Location Information Plaque shall be made of granite and the text will be decided by the Engineer/Employer.

The Engineer shall issue to the Contractor the text, letter sizes, and details. The Contractor shall remove all name boards on completion of the Contract Period.

a. Measurement

Project name boards and location indication plaque shall be measured as the number of boards/plaque satisfactorily provided, installed, maintained throughout the Contract period and removed after completion of works.

b. Payment

Payment shall be made at the stated unit rate per signboard/plaque. The price shall be full compensation for all materials and labour required to perform the work described.

Project Inauguration Plaque and related services shall be measured as a provisional sum and payment to the Contractor for such services shall not exceed the Provisional Sum indicated for this purpose.

Pay Item	Description	Pay Unit
106.6(1)	Provide and Maintain project Name Boards	Number
106.6(2)	Project Inauguration Plaque and related services	Provisional Sum
106.6(3)	Location Information Plaque (state number of Locations)	Number

107 WORKMANSHIP AND QUALITY CONTROL

107.1 General

The Contractor is responsible for producing work which conforms in quality and accuracy of detail to the requirements of the Contract (see relevant clauses of General Conditions of Contract) and the Contractor shall, at his own expense, institute a quality control system and provide experienced Engineers, technical officers, surveyors, materials technicians, other technicians and other technical staff, together with all transport, instruments and equipment, to ensure adequate supervision and quality control of the Works at all times.

The cost of all supervision and quality control, including testing, carried out by the Contractor shall be deemed to be included in the rates and prices tendered for the related items of work, except where otherwise specifically provided for in the Contract.

The Contractor's attention is drawn to the provisions of the various sections of the Specification regarding the minimum frequency of testing that will be required for quality control. The Contractor shall, at his own initiative, increase this frequency where necessary to ensure adequate control.

The Engineer shall have the authority to increase the frequency of testing to check the degree of compliance of works with the Specifications.

On completion of every part of the Works and submission to the Engineer for examination, the Contractor shall submit to the Engineer the results of all relevant tests and survey checks that he has carried out indicating compliance with the Specification.

For cement, tor steel bars, mild steel bars, coated metallic mesh, coir net and such materials, the Contractor shall furnish to the Engineer the manufacturer's test certificates of the actual material to be incorporated in the Works. When required by the Engineer to carry out essential testing at a manufacturer's plants or at laboratories other than the site laboratory, all costs involved shall be borne by the Contractor.

The methods of sampling and testing of materials shall be required under relevant clauses stipulated in these Specification or as approved by the Engineer.

The Contractor shall be required to demonstrate the adequacy of the equipment for each operation to establish its/their capacity to achieve the requirements to the Specification to the satisfaction of the Engineer before commencement of the Work.

All equipment provided shall be of proven efficiency and purpose made for the required operation and shall be operated by skilled operators and maintained at all times to perform its proper function in a safe and efficient manner acceptable to the Engineer.

107.2 Measurement and Payment

No separate payment shall be made for items under this section. Payment shall be deemed to be included in Sub-section 106.4 .

108 STANDARDS

108.1 General

In the absence of any definite provisions in the Specifications on any particular issue reference shall be made to the latest Codes of SLS, BS, ASTM, or AASHTO in this order of sequence. Where these are unhelpful, the execution and completion of the Works and relevant tests shall conform to sound engineering practice and, in case of any dispute arising out of the interpretation of the above, the decision of the Engineer shall be final and binding on the Contractor.

Where BS tests are stipulated in the Specifications, the equivalent ASTM or AASHTO test method may be substituted as directed by the Engineer.

108.2 Supply of Codes of Practice, Standards and Materials References

These shall be the latest editions or as stated below or as decided by the Engineer. The documents provided by the Contractor shall be original publications and not Photostat copies. These shall be the latest edition with all corrections and incorporations as at 30days before the closing date for bid submission. The publications shall become the property of the Engineer upon completion of the Contract. The type of publications requested may include:

- SLS
- BS
- AASHTO Publications
- ASTM Publications
- FIDIC Documents
- HMSO Publications
- ICTAD Publications
- TRL Publications
- CIRIA Publication
- Australian Standards

108.3 Measurement and Payment

Payment will be made for this item as a Provisional Sum. The Contractor shall verify with the Engineer the individual items required and obtain approval from the Engineer prior to purchase.

Pay Item	Description	Pay Unit
108(1)	Allow for provision of standards / technical literatures as required by the Engineer	Provisional Sum

109 WORK EXECUTED BY THE EMPLOYER OR OTHER CONTRACTORS

The Employer reserves the right to execute on Site work not included in the Contract and to employ for this purpose either his own employees or other contractors.

The Contractor shall ensure that neither his own operations nor the actions of his employees shall interfere with the operations of the Employer or his contractors on such works, and the same obligations shall be imposed on the Employer or contractors in respect of work being executed under the Contract.

The Contractor shall provide unhindered access to all parts of the Site to the Employer and authorized representatives of the Employer and of public bodies and corporations and to contractors employed by the Employer and he shall make available to such authorized persons the use of all temporary access tracks in or about the Site.

110 SERVICES

In the execution of Works by the Contractor, if any services, public or private may be damaged shall be undertaken by the appropriate Authority or by the Contractor under the supervision of the appropriate Authority, for reinstatement or repair.

110.1 Existing Services

The Contractor may be ordered to carry out certain works for and on behalf of various statutory service authorities and he shall also provide, with the prior approval of the Engineer, such assistance to the various bodies as, may be authorized by the Engineer.

No removal of or alterations to any public utility shall be carried out unless ordered by the Engineer after authorization by the appropriate Authority.

The Contractor shall take all reasonable precautions to protect, and shall provide temporary support to, existing services during construction and during reinstatement or repair of damaged services.

Whenever services are encountered that interferes with the execution of the works and requires moving or relocation, the Contractor shall advise the Engineer who will determine the extent of the work involved.

Any pipe, cable, conduit or other known service of any nature whatsoever, which has been damaged as a result of the Contractor's operations shall be repaired and reinstated forthwith by the Contractor or by the authority concerned, at all the expense of the Contractor or the authority and to the satisfaction of the Engineer.

The Employer will not be held liable or responsible for any delay in completion of the Works under this Contract which may occur due to any damage occurring to such services in consequence of the Contractor's operations.

110.2 Measurement and Payment

a. Measurement

The work of temporary supporting and protecting public utility services during execution of the Works shall be paid under a Provisional Sum.

The amount of work involved in reinstatement or repair to damages of existing services shall be determined on Site and as instructed by the Engineer.

b. Payment

Payment for repair to damages of existing services shall be made under a Provisional sum.

Pay Item	Description	Pay Unit
110(1)	Temporary supporting and protecting public utility services during execution of works	Provisional Sum

111 MAINTENANCE OF EXISTING ROADS

111.1 General Obligations

The Contractor shall take all reasonable steps to minimize nuisance during the construction of the Works.

All existing highway and roads used by vehicles of the Contractor or any of his sub-contractors or suppliers of materials or plant, and similarly any new roads which are part of the Works and which are being used by traffic, shall be kept clean and clear of all dust /mud /extraneous materials dropped by the said vehicles or their tires. Similarly, all dust / mud /extraneous materials from the Works spreading on these highways shall be immediately cleared by the Contractor.

Clearance shall be affected immediately by manual sweeping and removal of debris, or, if directed by the Engineer, by mechanical sweeping and clearing equipment, and all dust, mud and other debris shall be removed entirely from the road surface. Additionally, if so directed by the Engineer, the road surface shall be hosed or watered using suitable equipment. The road surface shall be maintained in a better or similar condition at all times.

Any structural damage caused to the existing roads by the Contractor's constructional plant or equipment shall be made good at Contractor's expense.

a. Payment

All these activities shall be deemed to be included in the Contractor's rates and prices and no separate payment will be made thereof.

112 PROTECTION OF THE WORKS AND REQUIREMENTS TO BE MET BEFORE THE COMMENCEMENT OF CONSTRUCTION OF NEW WORKS ON ALREADY COMPLETED WORKS

(i) The provision of temporary drainage works such as drains, open channels, bank, etc., and the furnishing and operation of temporary pumps and such other equipment as may be necessary to adequately drain, protect and dewater the Works and Temporary Works. This will be in addition to any permanent drainage works specified and installed, and in addition to any temporary drainage works specifically paid for separately.

(ii) Measures to protect the newly excavated slope against erosion such as covering the slope with tarpaulin, etc., shall be carried out until the slope is properly protected (by guniting, etc.)

(iii) Fill and cut slopes shall be promptly repaired whenever damaged by surface water.

(iv) The Contractor shall inform the Engineer of damage or defects to any work before repair or maintenance and the Engineer shall instruct the extent and method of repair.

a. Payment

Work performed as part of the above obligations shall not be measured and paid for separately and the cost thereof is deemed to be included in the Contractor's rates and prices.

113 REMEDIAL WORK

When any part of the Works fails to conform to the Specification, or is at any stage before final acceptance damaged so that it no longer conforms to the Specification, the Engineer shall instruct its complete removal and replacement with satisfactory work. In special cases the Engineer may instruct the Contractor to apply remedial measures in order to make good any such defects or damage. The remedial measures taken shall be subject to the Engineer's approval regarding the details thereof.

In particular, remedial measures shall ensure that the final product is in full compliance with the Specification shall not endanger or damage any other part of the Works, and shall be carefully controlled and submitted to the Engineer for examination when completed, or at any inter mediate stage as may be required.

For the guidance of the Contractor an indication of what may be required in the more common cases of defects or damage is given below, but the Engineer will in no way be bound to approve of or adhere to the measures indicated, as the actual remedial measures will be dictated by the circumstances of each particular case.

113.1 Earthworks

Where a cut slope has been over-excavated, reinstatement by backfilling will not normally be permitted and the entire slope may need to be re-trimmed to obtain a uniform slope.

Where erosion has occurred on the surface of cuts or fills, the damage shall be made good by back filling with suitable material and re-trimming. In more serious cases the slope may have to be cutback and backfilled after benching, and compacted to the required standard of compaction with suitable small equipment, followed by re-trimming.

113.2 Concrete

Defective concrete work will normally need the cutting back and complete removal of any weak or honeycombed sections and making good using approved bonding agents to bind fresh concrete to old concrete. Cracks, if permitted to remain, shall be injected with approved compounds and test cores taken to confirm the efficacy of the injection process.

113.3 Payment

Work performed as part of the above obligations shall not be measured and paid for separately and the cost thereof is deemed to be included in the Contractor's rates and prices.

114 WATER SUPPLY ARRANGEMENTS

The Contractor shall make his own arrangements for the procurement, transportation, storage, distribution and application of water needed for construction and other purposes except where otherwise specified.

Only clean water free from undesirable concentrations of deleterious salts and other materials shall be used. All sources of water used shall be approved by the Engineer.

Mechanically driven and operated water bowsers with effective spray equipment shall be provided at all times to ensure that compaction can proceed without any hold up on account of watering.

114.1 Payment

No direct payment shall be made for providing water and the cost thereof shall be included in the rates tendered for the various items of work for which water is needed.

115 SETTING OUT, SURVEY AND DRAWINGS

115.1 General

The Contractor's attention is drawn to the requirements of the General Conditions of Contract regarding setting out.

The Contractor shall check the condition of all permanent ground markers and shall satisfy himself they have not been damaged or disturbed and are true in regard to position and level. Where markers have been destroyed, damaged or displaced the Contractor shall reinstate a new marker based on the markers which remain. A new marker shall not be used unless it's true position and level has been established and the new values verified by the Engineer.

Where a marker is likely to be disturbed during construction operations, the Contractor shall establish suitable reference markers at locations where they will not be disturbed during construction. No marker shall be covered, disturbed or destroyed before accurate reference markers have been established and the details of the position and levels of such markers have been submitted to the Engineer and approved by him. The Contractor's reference markers shall be of least the same quality and durability as that of the existing markers.

The Contractor shall submit to the Engineer the method of setting out he proposes to employ. To ensure beyond doubt that the complex elements of the road or structure are truly and correctly located and the Contractor shall check all setting out by a different approved method. The Engineer may at any time request the Contractor to submit proof that his setting out has been satisfactorily checked.

The Contractor shall make all provisions necessary for the Engineer to check and measure the setting out of the Works and shall be in attendance to agree measurements and levels before construction works commence.

115.2 Setting Out and Surveying

The Contractor shall set out the based line and establish location reference points which are to be marked out on site and recorded. Level bench markers at locations of structures requiring modification shall be established and checked regularly and tied into the Permanent Ground Markers.

The Contractor shall survey the original ground levels, which will be jointly checked by the Contractor and the Engineer prior to the Engineer's approval and commencement of any construction work, and provide a set of cross sections at 5.00 m intervals. The cross sections shall be provided on computer disk in AutoCAD2013 version or latest version Format on a zip disk. The Contractor shall provide for the use of an AutoCAD technician/computer operator and a suitable computer and printer to enable the cross sections to be printed. The cross sections will show the existing ground levels and the finished design levels based on the design.

The cross section once checked and approved by the Engineer shall be the basis for measurement and payment.

The Contractor shall complete the setting out work within two weeks following the date of the Engineer's Notice to Commence the Works. Sufficient survey and drafting staff be available to enable the full setting out of the Works and for the drawing up of cross sections to be complete such that no delay is caused to the setting out of the Works.

The Contractor shall employ on the Works sufficient qualified surveyors with at least 2 years' experience in similar works and have a thorough knowledge and experience of computer methods for calculating quantities. The surveyors shall have available sufficient modern survey equipment and instruments which shall be to the Engineer's approval. The Contractor shall assist and supply services of his surveyor and his team to the Engineer whenever required by the Engineer or his Representatives in checking and measuring the Works.

No construction work shall commence on any section until the cross sections for the whole of that section have been checked by the Contractor and checked and approved by the Engineer.

115.3 Measurement

The quantity to be measured for cross-sections are detailed on drawings and approved by the Engineer. No separate measurement for construction ground markers shall be made.

115.4 Payment

The prices shall be full compensation for all labour, materials, equipment and incidentals required to furnish the required Setting out work, working drawings and cross sections as indicated.

Pay Item	Description	Pay Unit
115(1)	Setting out work, working drawings, as built drawings and cross sections	Lump Sum

116 FACILITIES FOR THE ENGINEER AND HIS STAFF AND EMPLOYER – N/A

117 ENVIRONMENTAL MANAGEMENT - REFER SECTION 2000

118 HEALTH AND SAFETY - REFER SECTION 2000

119 PROGRAMME OF WORKS

119.1 General

The Contractor shall submit the program of work mentioned in the Conditions of Contract, to comply with the following:

(i) The program of work shall be prepared using the scheduling software Microsoft Project or other similar project management software approved by the Engineer. Notwithstanding the above, the software must be capable of fulfilling the requirements described below. The Contractor's program shall be submitted in both hard and soft copies to the Engineer at intervals mentioned in the Conditions of Contract. In addition, the Contractor shall provide facilities to the Engineer and the Employer to study the submitted program and to track and monitor the progress of work, and carry out their obligations under the Contract which need the use of such project management software, within 14 days of receiving notice under the Conditions of Contract. Such facilities shall include, but not limited to, installing the software in the computers of the personnel handling the progress tracking in the Employer's and the Engineer's team and imparting the required training. Cost of providing such facilities is deemed to be included in the rates.

(ii) The Contractor shall maintain on Site the necessary computing, printing and plotting facilities together with suitably experienced staff to enable the Program to be reviewed and updated daily and, where necessary, revised.

(iii) The Program shall be structured to allow the Contractor and the Engineer to appreciate the general progress of the Works, while also providing sufficient detail for the Contractor to control, and the Engineer to monitor, day-to-day progress against scheduled progress.

(iv) The Program shall be continually updated by the Contractor to include actual progress of the Works.

(v) The Program shall clearly identify, at whatever level of detail necessary, the order of precedence of the Works, the interdependencies between the component parts of the Works and the critical path.

(vi) The unit of time for the Program shall be the day and it shall show all rest days and public holidays.

(vii) Each discrete activity shall be made up of tasks of sufficient detail to identify the individual resources needed for the task.

(viii) In addition to showing the starting dates, finishing dates, and the duration of activities, the Program shall show or incorporate, amongst other things:

- The dates and periods allowed for the design of important Temporary Works.
- The quantities and productivities used to calculate the duration of all activities.
- Resource histograms showing the daily and cumulative requirements for the major categories of labour, equipment and materials necessary to complete the Works in accordance with the Program.
- The cost to the Employer of each activity based upon the rates and prices in the Bill of Quantities.

- In the case of a sequential requirement for possession of site, the areas involved, the dates upon which possession will be required and the expected duration of such possession.
- Proper allowance for adverse weather conditions and any consequent disruption to the Works.
- Proper allowance for any increase in traffic over during week-ends and public rest days.

(ix) The Engineer shall review the program within 7 days, and where required by the Engineer, the Contractor shall revise and resubmit the program for the consent of the Engineer.

(x) Two copies of the program, in both electronic and printed form, and two copies of associated method statements are to be submitted each time.

This version of the program, initially submitted under the Conditions of Contract and consented to by the Engineer shall be used as a "Baseline Program". Any revised program shall be presented such that the Engineer can identify the departures from the Baseline Program and the revised resources necessary to meet the demands of the revised program.

119.2 Measurement and Payment

No separate payments shall be made for compliance under this Section. Payment shall be deemed to be included in the Contractor's rates.

120 CONSTRUCTION MANAGEMENT AND STAFF

120.1 Description

The Contractor shall seek the Engineer's approval to employ key personals as fulltime engagement for construction management staff and technical supervisory staff with required qualifications as specified in the Bidding Document and accordance with these specifications (refer Appendix A).

120.2 Measurement and Payment

a. Measurement

Salaries for the Contractor's construction management staff shall be measured monthly. The Contractor shall provide the breakdown of allocated monthly remuneration for each key staff member stated in Appendix A. If the Contractor does not provide the breakdown, the Engineer will determine the monthly rate for each member as necessary.

b. Payment

Payment shall include only for above mentioned key personnel. No separate payment shall be made for other staff of the Contractor. The Engineer may time to time withhold or deduct in full, the payment under this section in the case of non-employment of key personnel or employment of incompetent and under-qualified personnel consistent with the details provided details by the Contractor and/ or Appendix A/BOQ.

Pay Item	Description	Pay Unit
120(1)	Employing all necessary construction management staff and technical supervisory staff	Month

200 SITE CLEARING

201 CLEARING AND GRUBBING

201.1 Description

This work shall consist of clearing and grubbing necessary for the performance of the work covered by the Contract in accordance with the Specification.

The work shall consist of clearing and grubbing the designated areas within the designated site area including trees girth less than 300mm, dead wood, snags, vegetation, rubbish, loose boulders and objectionable material and shall include grubbing stumps and roots and disposing of all material resulting from the clearing and grubbing. It shall not include the demolition, removal and disposal of structures that obtrude into or encroach upon or obstruct the work, which are covered under Clause 202 .

201.2 Preservation of Property

Existing roads, improvements, facilities, adjacent property, utilities, services, and trees and plants designated for preservation shall be carefully protected from injury or damage, which could result from the Contractor's operations.

201.3 Construction Methods

a. General

Generally clearing and grubbing shall be performed on the areas designated by staking or detailed in the Contract. If no areas are so designated the areas, shall in principle be carried out over the entire area covered by the structure unless otherwise instructed by the Engineer.

b. Clearing and Grubbing

All surface objects, all trees, including stumps and roots, stumps and roots of previously felled trees, overhanging branches, except those trees and objects the Engineer directs to be left undisturbed, shall be cleared and grubbed subject to the following provisions:

(i) Outside the limits of the earthworks these are allowed to remain provided that the top of the stumps is not more than 300 mm above ground level. However, trees within these limits shall be cut so that the stumps are in line with the natural ground level as far as practicable.

(ii) Where lined drains or ditches are to be constructed stumps and roots shall be removed to a minimum depth of 250 mm below the excavated bottom or into the shaped slope.

(iii) In cut areas removed top soil up to a depth of maximum 0.15 m below the top of the existing ground level.

(iv) All fences, buildings, structures, and encumbrances of any character, except those to be removed by others, upon or within the limits of proposed structure, shall be removed by the Contractor and carefully placed on the abutting property or otherwise disposed of as indicated on the drawings or as instructed by the Engineer. Materials so removed, including any existing drain or culvert pipes, which the Engineer may order salvaged, shall be carefully removed and shall be the property of the Government.

c. Disposal of Cleared Material

(i) Saleable timber as designated by the Engineer shall be neatly stored in an approved accessible place as directed and shall be trimmed and staked in accordance with the requirements of the appropriate Government agency to which the timber belongs.

(ii) Un-saleable timber may be used by the Contractor for his own purposes in connection with the Contract always provided that he has ascertained and complied with the requirements of the appropriate Government Agencies or Authorities.

(iii) All un-saleable timber except that to be used, and all brushes, stumps, roots, logs and other refuse from the clearing and grubbing operations shall be burned or be disposed by other means approved by the Engineer.

In such cases, the Contractor will be solely responsible for making the necessary agreements and for paying the resulting expenses.

Piles of material for burning shall be placed either at or near the center of the cleared area, or in adjacent open spaces where no damage to trees, other vegetation and adjacent property shall occur. All burning shall be done in conformance with the regulations and at such times and in such a manner as to prevent the fire from spreading to areas adjoining.

(iv) At the end of such operations, site area and adjacent areas shall be left with a neat and finished appearance. No accumulation of burnt, half burnt or other material shall remain on or adjacent to the disposal area.

201.4 Back-filling of Holes and Depression Caused by Removal of Stumps or Loose Boulders

As instructed by the Engineer, holes and depressions caused by the removal of stumps or loose boulder shall be back-filled in layers with excavated or other approved materials and compacted at the appropriate moisture contents with vibrator tampers to required densities as per Section 304 . The control of quality shall be exercised in accordance with Section 802 .

201.5 Tests and Standards of Acceptance

The materials shall be tested in accordance with these Specifications and shall meet the prescribed criteria. The work shall conform to these Specifications and shall meet the prescribed standards of acceptance.

201.6 Measurement and Payment

a. Measurement

Clearing and grubbing will be measured on a plan area basis by the square meter (m^2), as indicated in Drawing on the actual work done at site. The work of clearing and grubbing at disposal sites, material sites, and borrow pit sites shall not be paid for when such areas outside the areas designated for clearing and grubbing.

Any areas occupied by existing asphalt, concrete or sealed road or otherwise maintained area are excluded from the designated areas and shall not be included in measurement.

Removal of trees, including stumps and roots unless otherwise specified, of girth less than 300mm and overhanging branches of girth less than 300 mm shall be considered as included in clearing and grubbing.

Removal of trees including stumps and roots, as well as stumps and roots of previously felled trees of girth greater than 300 mm, shall be measured in numbers and separately assessed according to the size categories given below:

(a) Girth greater than or equal to 300 mm and less than 600 mm
(b) Girth greater than or equal to 600 mm and less than 1,200 mm
(c) Girth greater than or equal to 1,200 mm and less than 2,000 mm
(d) Girth greater than or equal to 2,000 mm

Girth shall be measured at a level of 1.0 m above average ground level, or in case of stumps shorter than 1.0 m, at the highest level of the stumps. Overhanging branches of trees of girth greater than 300 mm shall be measured as directed by the Engineer. The girth shall be the girth of cut.

b. Payment

(i) Clearing and grubbing

This work measured as provided above shall be paid for at the Contract unit rate. The rates shall be full compensation for furnishing all labour, materials, tools, equipment and incidentals necessary to do the work and for doing all the clearing and grubbing in the designated areas and as specified in these Specifications and the Special Provisions and as directed by the Engineer including the removal, backfilling and compaction, reinstatement and making good, preservation of property, storage, transporting and disposal of all the resulting material.

(ii) Removal of Trees and Removal of Stumps of previously Felled Trees

Payment for removal of trees and stumps shall be made at the Contract unit rates and shall be the payment in full for carrying out the required operations including full compensation for all labour, materials, tools, equipment and incidentals necessary to complete the work.

These will include felling, excavating, backfilling with suitable material in layers and compacting as per Section 201.4 , handling, transporting, reinstatement and making good, preservation of property, storage and disposal.

Pay Item	Description	Pay Unit
201(1)	Clearing and grubbing inclusive of backfilling holes and trenches caused by removal of stumps and boulders	Square meter
201(2)	Removal of trees: 300 ≤ Girth < 600 mm	Number
201(3)	Removal of trees: 600 ≤ Girth < 1,200 mm	Number
201(4)	Removal of trees: 1,200 ≤ Girth < 2,000 mm	Number
201(5)	Removal of trees: 2,000 ≤ Girth mm	Number
201(6)	Removal of stumps of previously felled trees; 300 ≤ Girth < 600 mm	Number
201(7)	Removal of stumps of previously felled trees; 600 ≤ Girth < 1,200 mm	Number
201(8)	Removal of stumps of previously felled trees; 1,200 ≤ Girth < 2,000 mm	Number
201(9)	Removal of stumps of previously felled trees; 2,000 ≤ Girth mm	Number

202 REMOVAL OF EXISTING STRUCTURES

202.1 Description

This work shall consist of dismantling and removing existing retaining wall structures (i.e. gabion wall, mass & reinforce concrete, masonry and etc.), masonry structures and other structures such as guard rails, manholes, catch basins, inlets and the like which are in place, but interfere with the Works and are not suitable to remain in place, and salvaging and disposing of the resulting materials. It shall include the demolition, removal and disposal of buildings or parts thereof necessary to perform the Work where such has not been undertaken or completed by the Employer or the building owners.

All materials obtained from dismantling shall be the property of the Employer.

Dismantling and removal operations shall be carried out with such equipment and in such a manner as to leave undisturbed any adjacent pavement, structures or other items specified to be left in place. All operations necessary for the removal of any existing structure which might endanger new work shall be completed prior to the start of the new work.

Prior to commencement of the work, the Contractor shall submit his “Disposal Plan” to the Engineer for approval.

202.2 Dismantling of Structures

Structures shall be dismantled carefully and the resulting materials so removed as not to cause any damage to the serviceable materials to be salvaged, the part of the structure to be retained and any other properties or structures nearby.

Unless otherwise specified, the superstructure portion of culverts shall be entirely removed and other parts removed to below the ground level or as necessary depending upon the interference they cause to the new construction. Removal of overlying or adjacent material if required in connection with the dismantling of the structures shall be deemed to be included in this item.

Where existing culverts or retaining structures or drains are to be rehabilitated only such part or parts of the existing structure shall be removed as are necessary to provide a proper connection to the new work. The connecting edges shall be cut, chipped and trimmed to the required lines and grades without weakening or damaging any part of the structure to be retained. Reinforcing bars, which are to be left in place, so as to project into new work as dowels or ties shall not be damaged during removal of concrete.

Pipe culverts shall be carefully removed in such a manner as to avoid damage to the pipes.

Masonry structures shall be dismantled to the extent shown in the Drawings and as directed by the Engineer.

The serviceable materials shall be transported and stacked at locations approved by the Engineer, and the unserviceable materials shall be disposed of as directed by the Engineer.

202.3 Salvaged Materials

Materials which may be used directly in the Permanent Works shall be stockpiled separately from those which require processing for reuse. The materials selected for processing should be of such quality as will meet the Specification after breaking, screening and mixing with better quality materials if necessary. The responsibility of selecting a particular material for processing or incorporating in the Permanent Works shall lie with the Contractor.

Acceptability of the materials (after processing as the case may be) shall be determined by the Engineer and only such materials that satisfy the Specification in all respects shall be permitted for incorporation in the Permanent Works.

The materials failing to satisfy the Specification may be used in the Temporary Works or may be used in the lower layers of structure backfilling or to fill depressions, stump holes, boulder holes and the like with the approval of the Engineer. The materials not required by the Contractor for incorporation in the Works, but which are of use to the Employer, shall be neatly stockpiled as directed by the Engineer.

Structural and reinforcing steel obtained from dismantling existing structures shall not be considered suitable for use in the Permanent Works and shall be stored in a neat and presentable manner in locations suitable for loading. Structures or portions there of which are specified in the Contract for re-erection, shall be stored in separate stockpiles. Pipe culverts that are removed in good condition shall be cleaned and neatly stockpiled at points designated by the Engineer.

All the products of dismantling operations which in the opinion of the Engineer cannot be used in the Works or reused by the Employer shall be disposed or may be spread in deep borrow pits, as directed by the Engineer.

The Contractor shall comply with the laws, ordinances, building regulations, etc. as prevailing in Sri Lanka. Unless otherwise permitted by the Engineer, the Contractor shall furnish, erect and maintain suitable barricades to prevent personal injury or damage to property.

202.4 Removal of Fences and Guard Rails

The work shall consist of removal of fences and guard rails at locations as instructed by the Engineer. The re-useable material shall be removed with due care and stacked and stored for re-use. The unusable material and debris shall be transported and disposed as instructed by the Engineer.

202.5 Backfilling

As instructed by the Engineer, holes and depressions caused by dismantling operations shall be backfilled with excavated or other approved materials and thoroughly compacted to match surrounding areas as per Section 201.4 .

202.6 Measurement and Payment

a. Measurement

The required and accepted work of dismantling and removing structures shall be measured as the cubic meter (m^3) of structural material in place before demolition. Removal of fences shall be measured per linear metre (m).

b. Payment

The Contract unit rate specified for the work concerned shall be full compensation for furnishing all labour, materials, tools, equipment and incidentals necessary to complete all the work required by the Contract and as directed by the Engineer.

Payment shall include full compensation for carrying out the operations described including but not limited to excavation, backfilling of excavations using approved materials, preparing and shaping, handling, sorting out, salvaging, stockpiling and disposing of material.

Pay Item	Description	Pay Unit
202(1)	Dismantle and removal of rubble/ brick masonry structures	Cubic meter
202(2)	Dismantle and removal of gabion structures	Cubic meter
202(3)	Dismantle and removal of concrete (R/F and mass) structures	Cubic meter

202(4)	Dismantle and removal of dress stone masonry structures	Cubic meter
202(5)	Removal of fencing and Guard rail	Linear meter

203 UTILITY RELOCATION

203.1 Description

Where utility relocation is encountered in construction work, it shall be executed by the Contractor under the co-supervision of the Engineer and the utility agency with the consent of the utility agency.

203.2 Measurement and Payment

Payment shall be made as a Provisional Sum and shall be payable when the Contractor has completed the works to the satisfaction of the Engineer. The Contractor shall also submit relevant proof documents. The Contractor will be entitled to additional 10% overhead and profit on top of the actual cost, in this regard.

Pay Item	Description	Pay Unit
203(1)	Relocation of utility services as per requirements of the utility service agency	Provisional Sum

300 EARTHWORKS

301 SIDE SLOPE EXCAVATION OR TRIMMING

301.1 Description

Side slope excavation or trimming shall consist of all the required excavation within the limits of the Works except excavation otherwise classified. The work shall include the removal, stockpiling, multiple handling, hauling and proper utilization in the Works or disposal to spoil tips located by the Contractor and approved by the Engineer of all excavation materials, and shaping of excavation and preparation of exposed surfaces of excavation on the entire length of the slopes, in accordance with the Specification and the lines, grades, dimensions and cross-sections shown on the Drawings and as required by the Engineer.

Slope excavation or trimming shall include the following:

(i) All excavated material indicated on the Drawings within the faces of the cross-sections, excavation of all materials for approach roads, streets, intersections and all other areas but not including excavation for ditches, channels, berm ditches, drains and flumes.

(ii) Excavation for stream and channel diversion except where covered under Section 303 .

(iii) Excavation not specified elsewhere but nonetheless required for a proper execution of the Works.

301.2 Classification of Materials

a. Soil Suitable for Fill

Soil suitable for fill shall include all suitable materials excavated in accordance with the Specification which meets the requirements of Section 904 : Table 904-1.

b. Hard Rock

Slope or retaining wall foundation excavation classified as hard rock shall include only slope or retaining wall foundation excavation which, in the judgment of the Engineer, is not practicable without the use of pneumatic tools or drilling and chemical blasting operations. Hard rock shall not include boulders less than 1cubic meter (m^3) in size. Hard rock shall not include material which, in the judgment of the Engineer, can be loosened or excavated with equipment equivalent to that of the following description:

(i) Tractor Unit: Equipment with a minimum weight of 17 tones and net horse power rating of 150 HP or more. The tractor unit is to be in good condition and operated by experienced personnel skilled in the use of ripping equipment.

The ripper to be attached to the tractor shall be the most efficient parallelogram type recommended by the tractor or ripper manufacturer. The ripper shall have a single shank in first class condition with sharpened cutting point.

(ii) Bucket Excavator (backhoe): Equipment able to be fitted with a bucket of maximum size 0.30 cubic meter (m^3).

c. Boulders

Boulders shall comprise solid pieces of rock that are weathered on all faces (boulders) that are between 0.25 cubic meter (m^3) and 1.0 cubic meter (m^3) in volume. Boulders that exceed the stated volume shall be classified as Hard Rock. Boulders that are less than the stated volume shall be measured as Unsuitable Soil.

Measurement of boulders will take as the maximum dimension along the longest axis of the boulder (length) multiplied by the area of a circle of a circumference equal to the measured girth of the boulder at its widest point.

d. Unsuitable Soil

Material excavated from within the site meet the followings, those material shall not be used in permanent works.

1. Peat, materials from swamps, mashes and blogs
2. Logs, stumps and perished material
3. Clay having a liquid limit determined pursuant to BS 1377: Part, exceeding 90 or plasticity index determined in accordance pursuant to BS 1377: Part 2, exceeding 65

4. Material having hazardous chemical or physical properties requiring special measures for its excavation, handling, storing, transportation, deposition and disposal

No soil shall be classified as unsuitable without the approval of the Engineer. Such unsuitable soil shall be excavated and disposed of to spoil tips as instructed by the Engineer.

e. Material from Slips/Slides

All the loosened and unstable debris such as soil, rock boulders (any size) and fragments, trees, vegetation shall be cleared and removal from the site prior to commencement of implementing any mitigation measures. However, since there is a high tendency of slope instabilities followed by them, all such earth removal works shall be undertaken under full supervision and instructions of the Engineer. Hence in this regard, prior written approval shall be obtained from the Engineer for a clearly described methodology of statement. The material classified as unsuitable material and disposed of to spoil tips as instructed by the Engineer.

f. De–Watering

If water is met within the cut area due to seepage, springs or rain, it shall be removed by suitable means as and where required by the Engineer. Care shall be taken to discharge the drain water so as cause no damage to the works or any adjacent property.

301.3 Construction Requirements

(a) All excavation or trimming work shall be performed as specified required alignment, levels, grades and cross sections.

(b) Unless otherwise, excavation in hard rock shall as indicated on the Drawings or as instructed by the Engineer.

(c) Topsoil encountered in excavation and classified as suitable for re-use shall be removed to such a depth as the Engineer may direct and be neatly stockpiled. The topsoil so stockpiled shall be made available for the Works without additional charge. No topsoil shall be disposed of without prior written approval of the Engineer.

(d) All suitable excavated materials shall be deemed to be used in constructing the structure backfilling and slope rectification work. Unsuitable material and slope excavation in excess of that needed for executing the Works shall be known as spoil. Spoil shall be removed and disposed of at designated areas or spoil tips located by the Contractor and approved by the Engineer in such a manner as to present a neat appearance and to avoid obstruction to drainage or drainage to any road or road works or other property. The final condition of spoil tips shall be to the approval of the Engineer.

(e) All slopes shall be finished in a neat and workman like manner and to accuracy appropriable to the material and care shall be taken that no material is loosened below the required slopes. Breakages and slides shall be removed and disposed of as instructed by the Engineer.

(f) All material derived from any excavation required for the Works shall be deemed to be the property of the Employer and the use of all such materials shall be in accordance with the Contract and to the approval of the Engineer.

301.4 Measurement and Payment

a. Measurement

Unless otherwise specified, all required and accepted slope excavation/trimming shall be measured in its original position after clearing and grubbing; wherever applicable and the volume determined in cubic meters by the average end area method as computed from the original and final cross-sections of required and completed work. No allowance shall be made for bulking or shrinkage. Separate measurements shall be made for each class of material encountered.

Measurement of rock excavated as required in Section 301.2 herein shall be computed on the basis of excavation to the specified minimum depth only and no over break shall be included. Interim payment may be made on measured volumes of required excavation actually executed, before final shaping, provided the Contractor's intention to complete the work is clear. Excavation for removal of slides, breakages and cave-ins as a result of the Contractor’s work shall not be measured nor paid for and shall be deemed to be included in the Contractor's rates unless otherwise decided by the Engineer.

b. Payment

The quantities of excavation of soil suitable for fill are measured as specified above will be paid for at the Contract unit rates per cubic meter for the various types as detailed below. Such rates shall include laboratory and field test, excavating, chemical blasting, drilling, breaking, uphold the sides, working space, taking precaution to avoid property damage, compaction, loading, transport and stockpiling.

The quantities of disposal of excess materials; any remainder after using materials, measured as specified above will be paid for at the Contract unit rates per cubic meter for disposal of all type excess of excavation, to designated spoil tips or to spoil tips located by the Contractor and approved by the Engineer, for shaping, dressing and completion of all surfaces and for furnishing all labour, materials, tools, equipment and incidentals necessary to complete the work. The rate for top soil shall include stockpiling or disposal as instructed.

The quantities of excavation of unsuitable materials measured as specified above will be paid for at the Contract unit rates per cubic meter for the various types as detailed below. Such rates shall include laboratory and field test, excavating, chemical blasting, drilling, breaking, uphold the sides, working space, taking precaution to avoid property damage, compaction, removal, stockpiling, multiple handling and satisfactory disposal of all type of excavation of unsuitable materials, to designated spoil tips or to spoil tips located by the Contractor and approved by the Engineer, for shaping, dressing and completion of all surfaces and for furnishing all labour, materials, tools, equipment and incidentals necessary to complete the work. The rate for top soil shall include stockpiling or disposal as instructed.

No separate payment for excavation of rock boulders or fragment (any size) in unsuitable material from slides/slips.

The Contract unit rate specified for the work concerned shall be full compensation for furnishing all labour, materials, tools, equipment and incidentals necessary to complete the work, including compaction and trimming to specified tolerances as instructed by the Engineer.

The slides cause due to the Contractor's less caution will not be measured or pay.

Pay Item	Description	Pay Unit
301(1)	Excavation of slope up to required angle (soil suitable for filling and unsuitable for filling)	Cubic meter
301(2)	Excavation and disposal of– Boulders (0.25 m^3-1.0 m^3)	Cubic meter
301(3)	Excavation and disposal of – Hard rock, specify the method of blasting	Cubic meter
301(5)	Disposal of excess soils away from site	Cubic meter
301(6)	Excavation and disposal– Un-suitable soil (including rock boulders – any size) from slips/slides away from site	Cubic meter

302 EXCAVATION AND BACKFILL OF STRUCTURE

302.1 Description

This work shall consist of necessary excavations for retaining walls, lined drains and other structures. The work shall include the necessary diverting of streams; construction and subsequent removal of necessary cofferdams and cribs: all necessary sheeting; shoring, bracing, dewatering and pumping: removal of logs, stumps and other deleterious matter and obstructions for placing foundation; trimming and excavation: backfilling clearing the site of debris and disposal of excess excavated material.

The work shall be carried out in accordance with these Specifications and with the lines, levels, grades, dimensions and cross-sections as shown in the drawings or as directed by the Engineer.

Line Drains

Excavation for lined drains shall be measured as excavation for structures and shall be measured to the dimensions of the drain as shown on the Drawings. Casting of concrete against the excavated earth faces will be permitted subject to the Engineer's approval.

Drains shall be cleared of all debris prior to backfilling and any structural concrete above the top of bed level of proposed lined drain shall be removed and disposed of as noted in Section 202 herein. Drains shall be backfilled

with suitable material in layers of appropriate thickness as detailed on the Drawings or as instructed by the Engineer. Any spaces between the lined drain and over excavation for drains shall be cleared of debris prior to backfill. Such spaces shall be backfilled with suitable material in layers of appropriate thickness as detailed on the drawings and as directed by the Engineer.

302.2 Classification of Materials

a. Excavated Materials

The classification of excavated material shall be as given in Section 301.2 herein.

b. Backfill Materials

Backfilling shall be with material approved as suitable soil. It shall be obtained from the structure excavation if the material is approved as suitable for backfilling. Any additional material needed shall be obtained from slope excavation or trimming unless otherwise instructed by the Engineer.

c. Concrete for Foundation Fill

Concrete shall conform to the general requirements of Section 600 . Concrete to be placed under water shall conform to the requirements of Section 601.10 and concrete to be used as foundation fill in dry excavation shall be made with aggregate and cement conforming to the requirements of Section 601 . Concrete shall be mixed and placed in accordance with Section 601.10 , except that minimum cement content shall be 275 kilograms per cubic meter (kg/m^3).

d. Foundation Fill Material

Material for foundation fill shall consist of graded sand, gravel or crushed stone as shown in the Drawings or as instructed by the Engineer.

302.3 Construction Requirements

a. General

Prior to commencement of excavation operations, the limits of excavation shall be set out as shown in Drawings and as directed by the Engineer.

The depth/thickness of excavation shall be as shown in the Drawings, unless the hard rock strata encountered is such as to require changes. In the latter case the depth/thickness of excavation shall be as directed by the Engineer. Where breaking/chemical blasting is required it shall be carried out under the Engineer's instructions and all necessary precautions given therein carefully observed.

After each excavation is completed the Contractor shall notify the Engineer to that effect, and no bedding material or structure shall be commenced until the Engineer has approved the depth of Excavation and the characteristics of the foundation material.

b. Excavation for Foundation above Water Table

Unless otherwise directed excavation for foundations above water table shall be carried out to the width of the lowest step of the foundation and the sides left vertical without shoring where the nature of the soil and the depth of excavation allow it. Where this is not possible the Contractor shall erect all necessary shoring, shuttering and planking for the safety of personnel and works, subjected to the approval of the Engineer.

c. Excavation for Foundation below Water Table

Where water is encountered within the excavation due to stream flow, seepage, springs etc. the Contractor shall take adequate measures such as bailing, pumping, construction of diversion channels and bunds, coffer damming and any other measures to keep the foundation trenches free from water as necessary, however without any adverse effect to the surroundings due to dewatering operation.

Where coffer damming is required, these shall be constructed to adequate depths and heights with due regard to safety and stability and made as water-tight as necessary to permit work to be carried out inside them. The interior dimensions of the cofferdams shall be such as to give sufficient clearance for the construction and inspection and to permit installation of pumping machinery etc., as may be required within the enclosed area.

d. Preparation of Foundation

The bottom of the foundation shall be to the lines and levels as given in the Drawings or as required by the Engineer. Where this is in soil and above the water table it shall be watered where necessary and rammed and where it is below the water table it shall be prepared as directed by the Engineer.

Where rock strata are encountered, soft and weathered material shall be removed as necessary and the surface trimmed and dress as directed by the Engineer.

If the excavation has been carried out deeper than necessary, as given in the Drawings or as otherwise directed by the Engineer, the extra depth shall be made good with concrete or masonry of the foundation grade or any other approved material at the cost of the Contractor.

When, in the opinion of the Engineer, the foundation material is soft, contains organic matter, or is otherwise unsuitable, the Contractor shall remove the unsuitable material and insert foundation fill material, sand, rubble or concrete as specified or shown on the Drawings or instructed by the Engineer. If foundation fills material is instructed it shall be placed and compacted in layers not more than 200 mm compacted thickness or as instructed by the Engineer. The degree of compaction shall be the same as for embankment fill.

Rubble used shall confirm to Section 603.2 and sand used shall confirm to Section 901.1 and Table 901-3.

e. Backfilling

Backfilling of the foundation shall be carried out in accordance with sub section 304.3 h. (ii). As stated therein it shall be noted that the backfilling shall be done only after the foundation concrete or masonry has been in portion for at least 7 days and in a manner not to cause undue thrust on any part of the foundation. Wherever possible, the sides of the pit to be backfilled should be brought to the straight shapes enabling the use of small compactors or rollers. A step of 150 mm on every two layers of backfill and as directed by the Engineer shall be maintained, to avoid differential settlements.

Where backfilling is required to the same level on more than one side of the structure, it shall be maintained at heights not differing by more than 400 mm on opposing sides of the structure as backfilling proceeds, unless otherwise agreed by the Engineer.

If backfilling is required on more than one side of the structure, due to over excavation or collapse of sides or due to any other reason, backfilling shall be carried out in accordance with sub section 304.3 h. (ii).

302.4 Test and Standards of Acceptance

The material shall be tested in accordance with these Specifications and shall be prescribed criteria. The work shall conform to these Specifications and shall meet the prescribed standards of acceptance.

302.5 Measurement and Payment

a. Measurement

All excavation shall be according to dimensions as given in the Drawings prepared for the purposes of excavation and as directed by the Engineer, in Cu.m, for each class of material encountered. Excavation for working spaces and the Contractors convenient will not be measured. Excavation shall be measured using undisturbed volume excavated from the top of the surface after doing necessary excavation, cleaning and grubbing.

Any excavation in excess of above other than what had been allowed by the Engineer shall be considered as carried out for the convenience of the Contractor in exceeding the work and shall not be measured for payment.

For lined drains, excavation shall be measured as lined drain excavation and shall be measured to the dimensions of the drain as shown on the Drawings. Excavation for working spaces and the Contractors convenient will not be measured. Excavation shall be measured using undisturbed volume excavated from the top of the surface after doing necessary excavation, cleaning and grubbing.

Backfilling shall be measured using undisturbed volume in Cu.m., using the types of materials given in the Drawings or as directed by the Engineer. Backfill below the design levels and outside the dimensions as given in the Drawings prepared for the purposes of excavation will not be measured.

b. Payment

The quantities of excavation for structures as measured above will be paid for at the Contract unit rates per cubic metre for each class of material encountered. Such rates shall include full compensation for all labour, materials,

tools, equipment, safety measures, material testing and incidentals necessary to carry out the work to this Specification. This work shall include;

(i) Setting out
(ii) Removal of all logs, stumps and other deleterious matter and obstructions for placing for foundations
(iii) Cleaning the site and disposal of all surplus material
(iv) Shoring, Excavation
(v) Compaction, ramming
(vi) Constructing and disposing all cofferdams, dewatering
(vii) All safety precautions
(viii) Preparation of base of foundation
(ix) Diverting of streams.

The quantities of backfilling for structures as measures above will be paid for at the Contract unit rate for filling for each type of fill material used. Such rates shall include full compensation for all labour, materials, tools, equipment, safety measures, material testing and incidentals necessary to carry out the work to this Specification.

For line drains, no separate or extra payment shall be made for backfilling which shall be deemed to be included in the Contractor's rates. No extra or separate payment shall be made for over-excavation and there shall be no allowance for bulking or shrinkage.

No separate payment shall be made for the excavation for the working space.

Payment for cleaning of site shall be made under Pay Item 201(1) at Section 201 .

Pay Item	Description	Pay Unit
302(1)	Excavation for structures, soil suitable for filling including soft rock for reuse	Cubic meter
302(2)	Excavation for structures – Boulders (0.25 m^3-1.0m^3), specify the method of blasting	Cubic meter
302(3)	Excavation for structures – Hard rock, specify the method of blasting	Cubic meter
302(4)	Excavation for structures, unsuitable soil dispose away from site	Cubic meter
302(5)	Backfill with crush stone aggregate (20-200mm)	Cubic meter
302(6)	Backfill with suitable soil for structures	Cubic meter
302(7)	Disposal of excess soils away from site	Cubic meter

303 CHANNEL EXCAVATION

303.1 Description

This work consists of excavation for all channels, drains, ditches and the like both inside and outside the work limits where shown on the drawings or as instructed by the Engineer. The work shall include the proper utilization and hauling or disposal of all excavated materials, backfilling where required, constructing, and shaping and finishing all earthwork involved in conformity with the required alignment, levels, grades and cross-sections.

All drainage works in any section shall be constructed to the satisfaction of the Engineer before approval is given to commence slope protection works.

303.2 Classification of Materials

Materials excavated shall be classified as noted in Section 301.2 herein.

303.3 Construction Method

The channels, drains, ditches and the like shall be excavated to the alignment, levels, grades and cross sections, required on the Drawings or as instructed by the Engineer. Any excavation beyond the limits required shall not be paid for.

303.4 Measurement and Payment

a. Measurement

Channel or unlined drain excavation shall be measured as channel excavation and classified in accordance with Section 301.2 herein.

Quantities of channel excavation shall be measured in cubic meters determined by the average end area method computed from the original and the final cross-sections of the authorized and completed excavations. No allowance shall be made for bulking and shrinkage.

b. Payment

The payment shall be full compensation for all excavation, dewatering, backfilling where required, multiple handling, hauling and otherwise properly using and disposing of materials in spoil tips, for establishing and maintaining access to channels and for all labour, materials, tools, equipment and incidental**s.**

Pay Item	Description	Pay Unit
303(1)	Channel excavation, soil suitable for fill	Cubic meter
303(2)	Channel Excavation– Boulders, specify the method of blasting	Cubic meter
303(3)	Channel Excavation – Hard rock, specify the method of blasting	Cubic meter
303(4)	Channel Excavation, unsuitable soil dispose away from site	Cubic meter
303(5)	Disposal of excess soils away from site	Cubic meter

304 FILLING WORK

304.1 Description

This work shall consist of the construction of filling and other miscellaneous backfill with approved material obtained either from the excavation of the slope excavation or trimming, borrow pits or other sources in accordance with these Specifications and lines, levels, grades, dimensions and cross-sections shown in the Drawings or as directed by the Engineer.

304.2 Materials

General

All materials which are deposited in place prior to compaction shall confirm to Section 904 : Table 904-1 herein and shall be evenly spread over the whole of the designated area for the layer concerned and in such quantity that the thickness of anyone layer, when measured after compaction, shall comply with the requirements specified.

Any new layer less than 75 mm in compacted thickness shall be bonded to the previous layer by scarifying the previous layer to a depth not less than 25 mm or to such greater depth so that the total compacted thickness of the new layer plus the scarified portion of the previous layer will not be less than 100 mm.

Rock Fill

Rock shall be comprised of well graded large, intermediate, and smaller particles containing only a small amount of fine particles. Size of rock shall be as indicated in the Drawings.

304.3 Construction Requirements

a. Sources of Supply of Filling Material

All suitable material available from the excavation or trimming shall be used for filling work as directed by the Engineer. Where additional materials are necessary they shall be obtained from approved borrow pits or other approved sources.

b. Setting Out

The pegs or stakes showing the limits of the filling shall be fixed a suitable distance outside the actual limits of the fill and such pegs or stakes shall be painted in a distinctive color for vicinity.

c. Removal of Top Soil

Where the height of fill is more than 500 mm and less than 3.0 m, the topsoil shall be removed as described in Section 201 herein. Topsoil shall also be removed under fill whose height is greater than 3.0 m and where topsoil is required in other locations or on the instructions of the Engineer. If the in-situ material conforms to Filling Type II material it shall be compacted to a minimum depth of 150 mm to not less than 92% of the maximum dry density of the material at moisture content within 5% of the predetermined optimum moisture content as determined by BS1377 Test 13 (Modified Procter) or AASHTO T-180. The degree of compaction shall be checked by field density measurements (BS1377 Test 15) at the rate of one test for every 50 square metres or as instructed by the Engineer.

Where the height of fill is less 500 mm, the topsoil shall be removed as described in Section 201 herein. If the in-situ material conforms to Filling Type I material, it shall be compacted to a minimum depth of 150 mm below formation level, or to such depth as instructed by the Engineer, to not less than 92% of the maximum dry density of the material at moisture content within 5% of the predetermined optimum moisture content as determined by BS 1377 Test 13 (Modified Procter) or AASHTO T-180. The degree of compaction shall be checked by field density measurements (BS 1377 Test 15) at the rate of one test for every 50 square meters or as instructed by the Engineer.

d. Placing and Compaction of Filling Material

The material placed on the filling area shall be thoroughly broken down throughout the layer by means of equipment suitable for this purpose. The material shall be broken down to a size not exceeding 60% of the compacted layer thickness. The compacted thickness of the layers will be dependent upon the size to which the material can be broken down by the technique used but shall in general not be greater than 200 mm.

In order that layer thicknesses are not dictated by the presence of isolated larger rocks or stones, the Engineer shall instruct that the material which cannot be broken down to the size generally achievable for the rest of the material in the layer be removed from the fill.

Any water required before material is compacted shall be added to the material in successive applications by means of water bowsers fitted with sprinkler bars or by means of pressure distributors all capable of applying the water evenly and uniformly over the area concerned.

The water shall be thoroughly mixed with the material to be compacted by suitable equipment. Mixing shall continue until the required amount of water has been added and until a uniform mixture is obtained. Compaction may proceed when the moisture content of the un-compacted layer is within 5% of the predetermined optimum moisture content.

If the material is too wet it shall be dried by aeration and if it is too dry the material shall be sufficiently watered prior to compaction. Compaction shall be carried out as a continuous operation covering the full width of the layer and to be compacted with the available equipment before drying out.

The types of compaction equipment to be used and the amount of rolling to be done shall be such as to ensure that specified densities are obtained without damage to the underlying layers or to structures. During compaction the layer shall be maintained to the required shape and cross section and all holes filled and ruts and laminations shall be removed.

The Engineer may permit thicker layers than as specified above to be constructed, provided that he is satisfied that the specified densities can be obtained throughout the full depth of each layer and that the layers will be uniformly compacted by using equipment specifically suited to this purpose. Fill shall be placed in successive layers whose planes are parallel to the final surface, wherever this is practicable.

Each successive layer shall be placed only after the previous layer has been tested and found satisfactory as specified in Section 304.3 e. herein.

If at any time after compaction the layer is damaged by drying out or is damaged by rain, it shall be scarified, and re-compacted to the requirements of the Specifications at the Contractor's expense and to the approval of the Engineer.

The Contractor shall ensure that oversize material be disposed of or utilized elsewhere in the construction of the Works. This shall be avoided by proper selection in excavation in cut or in borrow. In cut such material shall be taken directly to spoil or shall be utilized as instructed by the Engineer.

Unless otherwise specified, the top 500 mm of the filling shall be constructed using Filling Type I material and the lower layers of the filling shall be constructed using Filling Type II material, as specified in Section 904 : Table 904-1 herein.

e. Degree of Compaction of Filling

The top 150 mm layer of the filling shall be compacted to not less than 92% of the maximum dry density of the material at a moisture content within 5% of the optimum moisture content as determined by BS1377–Test 13 (Modified Procter) or AASHTO T-180. The degree of compaction shall be checked by field density measurements (BS1377–Test 15) at the rate of one test for every 50 square meters or as instructed by the Engineer. The top of the layer shall be trimmed to line and level.

The remainder of the embankment shall be compacted to not less than 92% of the maximum dry density of the material at a moisture content within 5% of the optimum moisture content as determined by BS1377–Test 13 (Modified Procter) or AASHTO T-180. The degree of compaction shall be checked by field density measurements (BS1377–Test 15) at the rate specified in Section 802 : Table 802-1 herein.

f. Drainage of Protection of Filling

All permanent drains shall be constructed at the earliest opportunity, along with any temporary drains that may be necessary to protect the fill, and they shall be maintained in working condition throughout the construction period.

g. Finishing Operation

The fill shall be finished to levels, grades, slopes and Cross-sections shown on the Drawings and as directed by the Engineer. Where specified the slopes of fill shall be top soiled and grassed, measured and paid in accordance with Section 501 .

h. Filling Work under Special Condition

(i) Fill on Hill Slopes

Where filling are to be constructed on hill slopes, adequate bonding between the existing slope and new filling shall be established by removing the top soil and benching into the existing slope in vertical and horizontal faces including rock and the fill built in successive layers.

(ii) Filling around Structures

The Contractor shall take special precautions to see that the construction work of structures is not disturbed as a result of the filling operations and that the filling in the vicinity of a structure shall not be carried out till the concrete or masonry had been in position at least for 7 days, unless otherwise directed by the Engineer.

Filling around structures shall be carried out using suitable material and compacted to densities given in sub Section 304.3 e. Using special equipment such as mechanically operated hand rammers. The control on the quality of materials and works damage is done to the structure by these operations.

The filling shall be brought up simultaneously on each side of the structure to avoid unequal pressure acting on it. Any damage that is caused to the structures by the negligence of the Contractor shall be made good by him at his own expense.

(iii) Rock Fill

Rockfill shall be spread into position in approximately horizontal layers of thickness not more than 400mm unless otherwise specified. Rockfill layer shall be bonded with a layer of 40mm graded aggregate/. Rockfill shall be compacted using 1TON roller unless otherwise specified, until there is no visible movement of the rockfill under the equipment used for compaction.

304.4 Measurement and Payment

a. Measurement

Filling work shall be measured as compacted in Cu.m. The undisturbed volume of fill material within the design area shall be computed by the average end area method on cross-sections given in the Drawings or on actual cross-sections taken at site before and after the construction of the fill. No measurement should take for the settlements and voids for such as culverts should be excluded.

Filling work using rock shall be measured in Cu.m. in the same manner as for earth fill. The trimming, leveling and compaction of original ground shall be measured in Sq.m.

Application of topsoil on filling slopes and verges shall be measured as given in Section 501 .

Filter medium behind earth retaining structures shall be measured separately as given in Section 405 .

b. Payment

Payment will be based on the Contract unit rate for the separate items as measured above and shall include full compensation for all labour, materials, transport, tools, equipment and other incidentals necessary to complete the work to the Specification. This work & payment shall include the following where applicable.

(i) Setting out and pegging
(ii) Scarifying and benching slopes of existing fill and hill sides
(iii) Special arrangements and equipment that may be necessary for working under restricted conditions such as in the vicinity of structures.
(iv) Laying and compaction of suitable material.
(v) Field and laboratory testing.

Pay Item	Description	Pay Unit
304(1)	Fill in slope by using excavated soil including soft rock (Filling Type I or Type II material)	Cubic meter
304(2)	Filling work using rock material	Cubic meter
304(3)	High strength geotextile including site preparation and laying	Square Meter

305 NON – EXPLOSIVE BLASTING OPERATIONS

305.1 Description

This work shall consist of the breaking of rock or boulders within the sliding mass or unstable slopes using non-explosive expansive silent cracking agent for removing of unstable boulders, formation of foundation for structures and excavation of hard rock in accordance with these Specifications and lines, grades, levels, dimensions and cross-sections shown in the Drawings or as directed by the Engineer. The work shall include the removal, stockpiling, multiple handling, hauling and proper utilization in the Works or disposal to spoil tips located by the Contractor and approved by the Engineer of all excavation materials.

305.2 Materials

Material used for blasting operation shall be non-explosive expansive silent cracking agent. The Contractor shall get prior approval for the blasting material.

305.3 Construction Requirements

Design of blasting operation and drilling design shall be done by a Mining Engineer and design shall be submit to the Engineer for approval at least 21 (twenty-one) days before the commencement of the blasting.

The Contractor shall submit a method statement for the approval of the Engineer. The method statement shall consist with blasting design, drilling design, safety management etc. and shall submit for the approval of the Engineer. The Contractor shall inform the Engineer 14 days prior to commencing of the blasting operation and the Work shall be carried out according to the method statement approved by the Engineer. Blasting operation shall not produce any noise or vibration.

305.4 Measurement and Payment

Measurement and payment shall be made according to the Sections 301 , 302 and 303 .

306 TENSION CRACK SEALING

306.1 Description

Tension cracks and scars are extensional features of the landslide or cutting failures. Tension cracks can be found throughout a landslide and many landslide features initiate as tension cracks. Scars are generally found near the top of a landslide, in the zone of extension and generally begin at the surface first as tension cracks, which develop

into scars. Tension cracks can also be found along the flanks, outside the main landslide zone. Traverse cracks are located within the moving mass at the toe of the main slip surface.

Tension crack sealing shall consist of all the required excavation within the designated area. The work shall include the removal, stockpiling, multiple handling, hauling and proper utilization in the Works or disposal to spoil tips located by the Contractor and approved by the Engineer of all excavation materials.

306.2 Materials

The materials used for tension crack sealing shall meet the requirements of the following, unless otherwise specified.

(a) Concrete C30/20 shall conform to requirements of Section 601 of the Specification.
(b) Filling Type I soil used shall conform to requirements of Section 904 of the Specification.
(c) Cement used shall conform to requirements of Section 902 of the Specifications.
(d) Bentonite

306.3 Construction Requirements

a. Excavation for Cracks

Crack to be filled up to ground level by Bentonite slurry as directed by the Engineer. After harden Bentonite slurry; the excavation shall be carried out as shown in drawings or as instructed by the Engineer.

b. Crack Sealing

Excavated trench should be filled by Concrete C30/20 or Filling Type I soil as shown in drawings. Compaction of Filling Type I soil should be done according to Section 304.3 d.

306.4 Measurement and Payment

a. Measurement

The crack sealing shall be measured in cubic meter.

b. Payment

No separate payment shall be made for compliance of bentonite slurry and trench excavation. Payments shall deemed to be included in the concrete rates or Filling Type I soil rates and prices.

Pay Item	Description	Pay Unit
306(1)	Tension crack sealing by Concrete C30/20	Cubic meter
306(2)	Tension crack sealing by Filling Type I Soil	Cubic meter

400 DRAINAGE CONSTRUCTION

401 CUT–OFF DRAINS, CASCADE DRAINS AND SURFACE DRAINS

401.1 Description

The construction of drains, un-lined or lined, and covered where required, to dimensions, grades and in positions shown on the Drawings or instructed by the Engineer.

401.2 Materials

The materials used for lining the drains shall meet the requirements of the following, unless otherwise specified.

(a) Reinforcing steel to SLS 375, SLS 26 or BS 4449
(b) Formwork used shall be of steel, timber or any other material approved by the Engineer conforming the Section 605 .
(c) Cement used shall conform to requirements of Section 902 of the Specifications.
(d) The dowels shall be of mild steel having mechanical and physical properties specified in Section 606 .
(e) PVC pipes and fittings to SLS 147.

401.3 Construction Requirements

a. Excavation for Drains

The excavation shall be carried out as detailed in Section 302 .

b. Line Drains

All drains that are designated to be lined shall be constructed as shown in drawings or as directed by the Engineer. In-situ construction with concrete C15 and C25 shall be carried out as shown in the Drawings or as instructed.

In cascade drains, the fixing of dowels into the designated depths shall be as shown in Drawings or as directed by the Engineer.

c. Expansion Joints

10 mm thick expansion joint should be provided as shown in the drawings or as directed by the Engineer. The Contractor should be get prior approval for joint sealant material applies for expansion joint from the Engineer.

d. Weep holes for Drainage Walls

Weep holes shall be made of PVC pipe (PNT 7) for the drainage walls to facilitate the drainage of any water collected at the back of the structure, as per the drawings or as instructed by the Engineer. When pipes are embedded in the drainage walls, they shall be laid to the slope given in Drawings or required by the Engineer and shall extend from the rear face to the front face of the structure. They shall be protected from ingress of materials during construction and shall be cleaned before backfilling is placed behind the structure.

401.4 Measurement and Payment

a. Measurement

The excavation for lined drains shall be measured and paid as provided in Section 302 herein.

Measurement of lining of drains shall be in cubic meters. Reinforcement and Formwork for concrete shall be measured separately in kilograms and in square meter respectively.

The weep holes for drainage walls shall be measured in linear meters of weep holes.

b. Payment

No separate payment shall be made for compliance of expansion joint works and polythene cover for concrete, payments shall deem to be included in the concrete rates and prices.

Payment for supply and installation of dowels shall include drilling, grouting, cutting, tying, galvanizing etc., to complete the works.

The excavation for lined drains shall be paid as provided in Section 302 .

Pay Item	Description	Pay Unit
601(1)	Lean Concrete C15/20	Cubic meter
601(3)	Concrete C25/20 for walls and base of drains	Cubic meter
602(1)	Tor – Steel reinforcement	Kilograms
605(1)	Formwork for concrete sides of drains plain smooth finish	Square meter
606(1)	Supply and installation of hot dipped galvanized Mild steel dowels (specify the diameter of the dowels)	Linear meter
401(1)	50mm dia. PVC Weep holes (PNT 7) for drainage walls	Linear meter

402 SUB-SURFACE DRAINS (UNDERDRAINS OR TRENCH DRAINS)

402.1 Description

This work shall consist of construction of subsurface drains (under drains or trench drains) and drains outlets using perforated pipes, non-perforated pips and granular filter material. The work shall be carried out in accordance with this Specification and in conformity with the Plans or as directed by the Engineer.

402.2 Materials

The non-perforated pipes shall be of concrete, PVC or earthen, conforming to following standards.

- Concrete pipes to SLS 452
- PVC pipes to SLS 147
- Earthen ware pipes to SLS 449

The filter material shall be Geotextile/filter fabrics to requirement given in Section 905 .

Unless otherwise instructed, the perforated pipe to be installed shall be 110mm PVC (PNT 9) pipe. The pipe shall be drilled with 100 mm x 5 mm grooves at 100 mm centers on the bottom half of the perimeter of the pipes as shown in the Drawings or as directed by the Engineer. The pipe shall be un-slotted for a length of 1 m from the outlet end, or whatever length as directed by the Engineer.

Granular filter material, for bedding and for surrounding the pipe under-drains, shall be single graded aggregate of maximum size 37.5 mm conforming to the requirements of Section 901 unless or otherwise specified by the Engineer.

402.3 Construction Requirements

a. Sub-surface drains

Trenches shall be excavated to the dimensions and grades required and a minimum of 150 mm thick bedding layer of granular filter material shall be compacted in the bottom of the trench for its full width and length.

Care shall be taken to prevent the contamination of the granular filter material with soil or silt or other deleterious material during construction of the sub surface drains and all filter material contaminated shall be removed and replaced by the Contractor at his own expense.

Perforated pipes unless otherwise required, shall be laid with the perforations down and the pipe sections shall be securely jointed as specified or directed.

After the pipe installation has been approved, granular filter material shall be placed to a depth as specified so as to completely surround the pipe as shown in the Drawings or required by the Engineer. Single sized aggregate of nominal maximum size of 37.5 mm, instead of granular filter material can be used with the approval of the Engineer. The remaining portion of the trench shall then be filled and compacted in layer of 300 mm with impervious materials, as specified.

Where specified or ordered by the Engineer, geo-fabric filter as specified in Sub-section 905.6 shall be installed as shown on the Drawings. Filter fabric shall not be exposed to direct sunlight for prolonged and shall be protected from mechanical damage during installation and construction.

b. Subsurface Drain Outlets

Trenches for the outlets shall be excavated, to the dimensions required by the Engineer. The outlet pipes shall be laid on approved compacted bedding in the trench with their ends firmly jointed as required. On approval of the pipe installation the trench shall be back filled with approved suitable material and compacted in layers in accordance with section 304.3 d.

c. Aggregate Drains

Trenches shall be excavated to the dimensions and grades required and fill with filter material (20 mm single graded aggregate) shall be compacted of the trench for its full width and length.

Care shall be taken to prevent the contamination of the granular filter material with soil or silt or other deleterious material during construction of the gravel pack drains and all filter material contaminated shall be removed and replaced by the Contractor at his own expense.

Where specified or ordered by the Engineer, geo-fabric filter as specified in Sub-section 905.6 shall be installed as shown in drainage drawings.

402.4 Test and standard of acceptance

The materials shall be tested in accordance with these Specifications and shall meet the prescribed criteria. The work shall conform to these Specifications and shall meet the prescribed standards of acceptance.

402.5 Measurement & Payment

a. Measurement

Excavated and approved soil back fill shall be measured and paid for as provided for Section 302 .

For subsurface drains; perforated and outlet drain pipes shall be measured by the linear meter along the center line of the pipe for each type and size specified. No separate measurement for granular filter material and filter fabric.

For aggregate drains shall be measured by linear meter along the center line of the drain including filter fabric.

b. Payment

The quantities as determined above will be paid for at the Contract unit price which shall be full compensation for furnishing and placing of all materials such as geo-fabric, granular filter and PVC perforated pipe and including all labour, equipment, tools and incidentals necessary to complete the work prescribed.

No separate payment shall be made for outlet preparation of the sub-surface drains and aggregate drains.

The Pay Items and Pay Units shall be as follows:

Pay Item	Description	Pay Unit
402(1)	Sub-surface drain – PVC pipe Dia 110 mm (PNT 9)	Linear meter
402(2)	Aggregate drains	Cubic meter

403 CATCH-PITS AND INLETS

403.1 Description

This work shall consist of construction of manholes, catch-pits and inlets for underground drainage systems in accordance with these Specifications and with the lines and levels as shown on Drawings or as directed by the Engineer.

The inlets may be of gully type or side entry type or a combination of both as shown in the Drawings.

403.2 Materials

Materials shall conform to the requirements of the following unless otherwise specified.

- Reinforcing steel to SLS 375 or SLS 26
- Cement mortar for jointing to Section 902
- Mastic joint filler shall be of the approved varieties

- Frames, grating, covers and any other incidental items shall be as given in the Drawings or elsewhere in the Contract documents

403.3 Construction Requirements

All excavation and backfill required for construction shall be carried out in accordance with the requirements of Section 302 .

Inlets, catch-pits and manholes shall be constructed in-situ. In-situ construction of catch-pits shall be carried out using concrete as specified or instructed at site. Depth of the catch-pit as specified or instructed at site.

In-situ construction of inlets shall be carried our using concrete C25. Formwork for in-situ concreting of units shall conform to the requirements of Section 605 .

403.4 Tests and standards of acceptance

The materials shall be tested in accordance with these Specifications and shall meet the prescribed criteria. The work shall conform to these Specifications and shall meet the prescribed standards of acceptance.

403.5 Measurement and Payment

a. Measurement

The excavation for inlets and catch-pits new or reconstructed shall be measured and paid as provided in Section 302 herein.

Measurement of Concrete inlets and catch-pits new or reconstructed shall be in cubic meters. Reinforcement and Formwork for concrete shall be measured separately in kilograms and in square meter respectively.

b. Payment

The excavation for manholes, inlets and catch-pits shall be paid as provided in Section 302 .

Pay Item	Description	Pay Unit
601(1)	Lean Concrete C15/20	Cubic meter
601(3)	Concrete C25/20 for walls and base of catch pits	Cubic meter
602(1)	Tor – Steel reinforcement	Kilograms
605(1)	Formwork for concrete sides of catch pits plain smooth finish	Square meter

404 BERM SEALING

404.1 Description

The work shall consist of construction of berm sealing accordance with these Specifications and locations and thicknesses as specified in Drawings or as instructed by the Engineer.

404.2 Materials

Materials shall conform to the requirements of the following unless otherwise specified.

- Cement used shall conform to requirements of Section 902 of the Specifications.
- 50 mm x 50 mm (SWG – 14) Welded galvanized mesh (minimum cover 30mm)
- Mastic joint filler shall be of the approved varieties

404.3 Construction Requirements

In-situ construction of berm seals with concrete C25/20 shall be carried out. Concrete thickness 100mm with embedded Welded galvanized mesh unless otherwise shown in the Drawings and instructed by the Engineer.

At every 5 m interval should be maintained 10 mm width expansion joint and sealed the joint with joint sealant approved by the Engineer.

404.4 Measurement and Payment

a. Measurement

Measurement of Concrete for berm sealing shall be in cubic meters.

b. Payment

No separate payment shall be made for expansion joint, welded galvanized mesh and polythene cover for concrete as per drawings and payments shall deem to be included in the concrete rates and prices.

Pay Item	Description	Pay Unit
404(1)	Berm sealing with Concrete C25/20	Cubic meter

405 DRAINAGE BACKFILL BEHIND EARTH RETAINING STRUCTURES

405.1 Description

This work shall consist of the construction of a permeable layer of aggregate behind retaining structures to facilitate the free drainage of the retained soil layers (including any backfill) through the weep-holes of the structure.

The layer shall consist of a layer of large sized aggregate backfill immediately behind the wall and a layer of graded small aggregate, referred to as the filter medium placed along the sloping face of the aggregate backfill.

All works shall be carried out in accordance with the Specification and in conformity with Drawings or as directed by the Engineer.

405.2 Materials

a. Aggregate Backfill

The aggregate backfill shall be free draining and normally consist of aggregate larger than 20 mm and smaller than 200 mm, shall consist of hard and durable crushed stone.

b. Filter Medium

The filter medium shall be geotextile/filter fabrics to requirement given in Section 905 .

405.3 Construction Requirements

Prior to placement of the larger size aggregate behind the structure, the soil layer, on which the aggregate is placed, shall be well compacted and made impervious either by constructing a clay puddle or by the application of a bituminous binder or gauge 1000 polythene as required.

The aggregate backfill shall be placed along the wall and to a stable configuration and dimensions as indicated on the Drawings or as instructed. The material shall be hand packed using a hand tamper.

405.4 Tests and standards of acceptance

The materials shall be tested in accordance with these Specifications and shall meet the prescribed criteria. The work shall conform to these Specifications and shall meet the prescribed standards of acceptance.

405.5 Measurement and Payment

a. Measurement

The quantity to be measured shall be the number of Cu.m. placed, compacted and accepted in place, separately for the aggregate backfill and the filter medium.

b. Payment

The work measured as provided above will be paid for at the unit price per Cu.m. of drainage backfill behind earth retaining structures. The price shall be full compensation for all labour, materials, equipment and incidentals required to finish and acceptably place the materials. There shall be no separate payment for the impervious layer and payment shall be deemed to be included in the Contractor's rates.

Pay Item	Description	Pay Unit

405(1)	Aggregate backfill – (20-200 mm)	Cubic meter
405(2)	Geotextile/Filter fabric	Square meter

406 WEEP-HOLES FOR EARTH RETAINING STRUCTURE

406.1 Description

This work shall consist of providing opening in earth retaining structures to facilitate the drainage of any water collected at the back of the structure, as given in the Drawings or as directed by the Engineer and in accordance with these Specifications.

The weep holes may either be cast in-situ or consist of pipes embedded in the structure.

406.2 Materials

Unless otherwise instructed by the Engineer, weep holes shall be made of PVC pipe (PNT 7) to SLS 147.

406.3 Construction Requirements

When pipes are embedded in the earth retaining structure, they shall be laid to the slope given in Drawings or required by the Engineer and shall extend from the rear face to the front face of the structure. They shall be protected from ingress of materials during construction and shall be cleaned before backfilling is placed behind the structure.

406.4 Tests and standards of acceptance

The materials shall be tested in accordance with these Specifications and shall meet the prescribed criteria. The work shall conform to these Specifications and shall meet the prescribed standards of acceptance.

406.5 Measurement and Payment

a. Measurement

The weep holes for earth retaining structures shall be measured in linear meters of weep holes.

b. Payment

Payment shall be based on the Contract unit price for the item and shall include full compensation for all materials, labour, tools, equipment and incidentals necessary to complete the work to the Specifications.

Pay Item	Description	Pay Unit
406(1)	Weep holes using PVC pipes (PNT 7) – diameter to be specified	Linear meter

500 INCIDENTIAL CONSTRUCTION

501 TOP SOILING

501.1 Description

This work shall consist of supply of topsoil furnished and transported from approved sources or stockpiles and spread in conformity with these Specifications at locations shown on Drawings or as directed by the Engineer. Generally, where top soil is stockpiled adjacent to the Works, filling slopes shall be top soil in accordance with the Engineer's instructions.

501.2 Materials

Top soil provided by the Contractor or salvaged during clearing and grubbing shall consist of loose friable natural surface soil free of admixtures of sub soil, stumps, roots, rocks, weeds or other material which would be conductive to proper development of vegetative growth.

501.3 Construction Requirements

The Contractor shall notify to the Engineer at least 7 days before intends to start collecting top soil from specified areas.

Unless otherwise specified top soil shall not be spread on slopes steeper than 1:1.5 (1 vertical to 1.5 horizontal). Slopes steeper than 3:1 shall be scarified to depths indicated in Plans or established by the Engineer, prior to placing top soil. The area shall normally be roughened by hand scarifying, or by any other means approved by the Engineer, to ensure the stability of top soil spread.

After the Engineer has approved the prepared and graded areas, top soil shall be spread to a thickness after settlement shall not be less than 75 mm or the depth shown on Drawings or as instructed by the Engineer. Spreading shall not be done when the ground or the top soil is excessively wet or in a condition considered detrimental to the work. The topsoil layer shall be leveled off and raked.

The slope surface shall be kept clean during hauling and spreading operations. After spreading has been completed, large clods, stones larger than about 40 mm in diameter and any roots, stumps and other litter shall be raked up and removed and disposed of at an approved location.

501.4 Test and standards of acceptance

The materials shall be tested in accordance with these Specifications and shall meet the prescribed criteria. The work shall conform to these Specifications and shall meet the prescribed standard of acceptance.

501.5 Measurement and Payment

No separate payment shall be made for compliance of items under this section. Payments shall be deemed to be included in the Section 502 .

502 VEGETATION COVER

502.1 Description

This work shall consist of providing grass cover by seeding, sprigging or sodding, including soil preparation, fertilizing, mulching and watering as required, in conformity with these Specifications and with the Drawings or as directed by the Engineer. Where the slope hinders natural growth of grass cover, the work shall consist of application of permanent erosion control product before being vegetated.

502.2 Materials

a. Grass Seeds

The grass seeds shall be of an accepted variety reputed to produce a good grass cover. Seeds shall be furnished by the Contractor in standard sealed containers along with seed name, weight and other details as necessary.

Where required, a certificate from the vendor stating that the seeds have been tested within a stipulated period of time, not exceeding 6 months, and prior to the time of delivery shall be furnished.

Types of seeds, proportion of seed mixture, and volume of seed mixture to be applied to the sites shall be deliberately selected considering the following factors and clarified in the Method Statement:

- Planting plan,
- Expected germinating rate and growth rate,
- Site condition including fertility of top soil or vegetation bed,
- Timing of seeding or planting,
- Method and possible period of storage, and
- Impact on the environment.

Typical seeds varieties are given in the Table 502-1. However, approval should be obtained from the relevant authorities before planting any seeds in the mitigation sites.

Table 502-1: Typical seeds varieties

Common Name	**Botanical Name**
Green China grass	Ophipogen jpanica
Yellow white china grass	Ophipogen intermedium
Heenpegiri	Cympogon nardus
Sevendara	Vetiver zizanioides
Mahaudupiyaliya	Desmodium heterophyllum
HeenUdupiyaliya	Desmodium triflorum

In addition to the seed varieties mentioned in Table 502-1, seeds shall be selected based on site specific characteristics, and approval for planting shall be obtained from the Engineer.

Irrigation systems, sprinklers to be placed for the sites at public areas to prevent plant drying/wilting during dry periods

b. Grass Sods

Grass sods shall be of living vigorous growth of the type of grass to the size of 200 mm x 150 mm and thickness specified, having a dense root system, contained in suitable sods and free form noxious weeds and diseases and shall contain a minimum of 50 mm of topsoil.

c. Fertilizer

Fertilizer shall be from a standard commercial grade conforming to all relevant regulations and shall provide the minimum percentage of nutrients specified.

The fertilizer shall be evenly applied over all surfaces where grass is to be planted and shall then be thoroughly mixed with the soil to a depth of 100 mm either mechanically or manually.

Where the type of fertilizer is not specified, the Contractor shall obtain the Engineer approval prior to use of a particular fertilizer.

d. Mulch

Mulch used shall be straw, hay, sawdust or any other similar material specified in the Contract. They shall be free from material injurious to plant growth.

e. Water

Water used in planting or care of vegetation shall be free from oils, acids, alkalis, salts or any other substance injurious to plan life.

f. Hydro seeding Vegetation Bed

Material of hydro seeding vegetation bed shall be made of fertile soil, seed mixture, fertilizer, soil improving agents and adhesive agents. Hydro seeding vegetation bed material shall be blown on a slope for greening. Hydro seeding vegetation bed material shall be approved by the Engineer prior to the preparation of material.

g. Coir Mesh

Coir mesh used shall conform to requirements of Section 701 of the Specifications. Coir material shall be approved by the Engineer prior to use of particular coir material.

h. Anchor Pin

Coir mesh shall be fixed to the ground by anchor pins. Anchor pins shall be firmly installed into the ground in a manner in which it is not removed by rainfall or wind. Reinforcing bars with a diameter of 10 mm shall be used as anchor pins. The required embedded length of anchor pins is 400 mm.

i. Permanent Erosion Control Products

Unless otherwise specified, the material used shall be a rolled erosion control product composed of non-degradable synthetic fibers, filament, nets, wire mesh, and other elements processed into a permanent, three-dimensional matrix conforming to properties in Table 502-2.

Table 502-2: Material Characteristics for Permanent Erosion Control Product

Property	Specification Limit
Minimum Tensile Strength	1.82 kN/m
Minimum thickness	6.35 mm
% Open space/ Porosity	95%

The erosion control product shall be specially manufactured for the purpose of permanent erosion protection and vegetation reinforcement on geotechnically stable slopes. It shall be made from 100% synthetic material and contain no biodegradable or photodegradable components or materials. The material shall be capable of supporting a vegetative cover.

The product shall have a minimum 95% open space available for soil and root interaction for effective vegetation. It shall not lose its structural integrity or performance and shall not unravel or separate when the mat is cut in the field.

502.3 Construction Requirements

The area to be grassed shall meet the specified finish grades, be free of any weeds or plant growth, stones and other debris. Where direct grassing is hindered by the nature of the slope, the application of permanent erosion control blanket product shall precede the grassing work.

If top soiling is required, it shall be done in accordance with the requirements of Section 501 . The surface, where required, shall be loosened by raking.

a. Planting/Seeding on soil nailed surface

Seed mixtures and volume to be applied shall be clarified in the Method Statement for the Engineer's approval. The Method Statement shall also include timing of seeding, expected greening time based on the Contractor's investigation related to the site condition such as slope gradients, soil properties, climate, water situations and neighboring plants. Furthermore, based on the investigation, the Contractor shall include the construction schedule in the Method Statement.

The Contractor shall provide necessary falling prevention measures and other safety measures to the workers for cleaning slopes. The Contractor shall execute slope treatment including rounding the shoulder of slopes, cleaning the slope, removing unstable boulders and rocks, removing trees and shrubs which may obstruct the work, removing any harmful substances, and treating ground water and spring.

Coir mesh shall be fixed firmly to the slope by anchor pins. Then the hydro seeding vegetation bed material shall be carefully measured for each batch and sprayed on the slope with a proper hydro seeder machine. Prior to being sprayed, hydro seeding vegetation bed material shall be stirred well. Hydro seeding vegetation bed shall be sprayed evenly on the slope with a thickness of approximately 30 mm.

Seeding shall be done just before or during the rainy season or as instructed by the Engineer. The method of seeding and application of fertilizer, water and mulch shall be subject to the approval of the Engineer. Fertilizing,

watering and mulching shall be done as required and with the Engineer's approval. Unless otherwise specified or directed, sprigs shall be planted at approximate intervals of 150 mm apart.

Seeded area where grass has not taken root, shall be made good by the Contractor by suitably replanting before final acceptance. At the time of acceptance, areas determined by Engineer as poorly grassed shall not be measured for payment and the Contractor shall correct such areas as required by the Contract/ Engineer.

b. Sodding (Turfing)

Sodding shall be done just before or during the rainy season or as instructed by the Engineer. The Contractor shall notify the Engineer not less than 7 days before cutting of sods begin. Sods shall be approved by the Engineer, in its original position before cutting and delivery to the site. Areas to be covered with sods shall be given a layer of top soil 75 mm thick unless, due to the presence of suitable subsoil, the Engineer orders that the top soil can be omitted.

The areas to be covered with sods shall be thoroughly watered beforehand so that they are wet to a depth of at least 150 mm when sodding is done. Sods shall be laid on the prepared sod-bed within 24 hours after cutting expect where the Engineer has approved their being stored in stacks or piles, grass or root to root, for a period not exceeding 3 days.

The moving and laying of sods shall be done as far as possible, when weather conditions and soil moisture are favorable. Sodding may be done in one of the following methods as designated in the Drawings or as approved by the Engineer.

a) Solid sodding
b) Strip sodding
c) Spot sodding

In solid sodding, sods shall be laid edge to edge with staggered joints and the joints where necessary shall be filled with suitable top soil. After laying and joint filling, sodding shall be tamped in an approved manner to provide and eve surface. On slopes of 2:1 or steeper sods shall be pegged after tamping, at approximately 0.6 m centers and close to the center of sods.

Strips sods shall be laid in parallel rows as indicated in Drawings or as required by the Engineer. Each strip of sod shall be of width shown in Drawing or approved by the Engineer and shall be laid in a shallow trench and firmly tamped until the surface of the sod is approximately level with the adjacent ground.

Spot sodding shall consist of sod blocks laid as shown on Drawings or as required by the Engineer. The piece of sod shall be firmly tamped so that the surfaces of sod blocks are approximately level with the adjacent ground.

All grassed areas, be it by seeding or by sodding, shall be watered and cared for and maintained for a minimum period of 3 months in a satisfactory condition until final inspection and acceptance of the work.

Hydro seeded areas where grass has not taken root and sodded areas where grass has died, shall be made good by the Contractor by suitably replanting before final acceptance. At the time of acceptance, areas determined by Engineer as poorly grassed shall not be measured for payment and the Contractor shall correct such areas as required by the Contract/ Engineer.

c. Vegetating

Tree planting shall be done just before or during the rainy period or as instructed by the Engineer, in the areas as specified in the Drawings or as instructed by the Engineer. This work shall include:

i. Supply of plant seedlings/saplings of appropriate sizes or as specified by the Engineer
ii. Ground preparation work, setting out, pitting work
iii. Planting of supplied seedlings/saplings on prepared locations
iv. Applying of an appropriate protection method to sustain until a satisfactory level of growth is reached
v. Periodical application of appropriate fertilizer types for each plant type
vi. Any other maintenance work required during the contract period.

Following type of trees shall be used for vegetation unless otherwise instructed.

i. Artocarpus heterophyllus (Common name: Jack tree)
ii. Swietenia mahagoni (Common name: Mahogany)
iii. Alstonia macrophylla

Seed plants of Artocarpus heterophyllus with 1 feet height are suitable for the plantation. If the selected plants are bud plants, the recommended height is 3 feet. A pit sized 2 feet x 2 feet x 2 feet is suitable for plating Artocarpus heterophyllus. Above plant size and the pit size are same of Swietenia mahagoni plants.

The three types of plants can be used as a combination of vegetation for protecting lands. The Distance between 2 Artocarpus plants should be 7 m and distance between an Artocarpus plant and an Alstonia macrophylla plant should be 3.5 m.

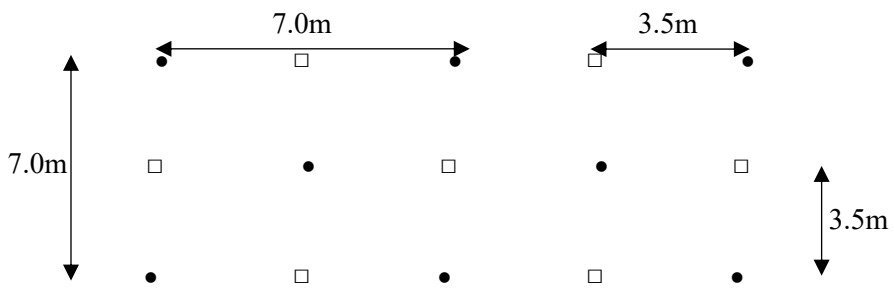

● -*Artocarpus plant*

□ -*Alstonia plant*

The Contactor shall submit a Method Statement specifying the method of carrying out the work listed above for prior approval of the Engineer before commencing above work. The works shall be carried out under strict guidance of an expert employed by the Contractor for cultivating the specified plant types

d. Application of Permanent Erosion Control Blankets

The slope section to be installed shall be prepared by clearing, grubbing and excavation or filling the area to the design angle. The slope surface shall be prepared to relatively smooth conditions free of obstructions, rocks, dirt clods, roots, stumps, depressions, debris and soft or low-density pockets of material. Existing erosion features such as gullies must be graded out of the surface before the product deployment.

Care shall be taken during installation to avoid damage occurring to the TRM as a result of the installation process. The manufacturer's installation instructions and recommendations, along with the drawings and specifications shall be strictly complied with during all installation activities.

502.4 Test and standard of acceptance

The materials shall be tested in accordance with these Specifications and shall meet the prescribed criteria. The work shall conform to these Specifications and shall meet the prescribed standard of acceptance.

a. Hydro seeding

Hydro seeding quality shall be evaluated based on the Table 502-3 criteria. The timing of evaluation shall be explained in the Method Statement. The actual timing of evaluation may be proposed by the Contractor based on the actual growth condition of the vegetation but shall be approved by the Engineer.

Table 502-3: Hydro seeding quality evaluation criteria

Evaluation		Greening situation as at 3 months after the seeding
For grass plants	Pass	- Green can be seen over the slope from distance of 10m. The covering ratio is 70% or more.
	Pending	- Around 10 plants per square meters are observed to grow but the growth rate is slow. Re-evaluation shall be done after 1~2 months. - The covering ratio is about 60~70%.
	Fail	- The vegetation bed is eroded or washed away and no chance for vegetation to grow. - The greening cover rate is less than 50%.

		- The Contractor shall re-execute the works without any additional cost.

b. Permanent Erosion Control Product

The materials shall be tested as specified in Table 502-4 and shall meet the prescribed criteria. The work shall conform to these Specifications and shall meet the prescribed standards of acceptance.

Table 502-4:Test methods of permanent erosion control products

Property	Test Method
Minimum Tensile Strength	ASTM D 4595
Minimum thickness	ASTM D 6525

502.5 Measurement & Payment

a. Measurement

The quantity measured for payment, for application of permanent erosion control blankets and/ or each method of grassing (i.e. planting/seeding on slope stabilized surface or sodding) shall be the area measured along the slope in Sq.m. and accepted in place by the Engineer. Transporting to site, soil mixing to improve the soil, miscellaneous works, such as preparation of temporary working platforms and maintenance will not be measured separately, but their cost shall be deemed to be included in the rate for application of the permanent erosion control blanket and/or grassing.

b. Payment

The work measured as above will be paid for at the Contractor's unit rate for the particular method of grassing. The payment shall be full compensation for furnishing of materials, labour, equipment, tools, fertilizer and incidentals necessary to complete the work and for the supply and placing of timber stakes and top soiling under Section 501 and for all other incidentals that may be required to establish an acceptable cover and to maintain the grass.

For hydro seeding payment should be made base on the Table 502-3.

The Pay Items and Pay Units shall be as follows:

Pay Item	Description	Pay Unit
502(1)	Planting/Seeding/Turfing on slope stabilized surface	Square meter
502(2)	Vegetating (Specify plant type, number and spacing)	Numbers
502(3)	Application of Permanent Erosion Control Blanket Product	Square meter

503 GABION WALLS AND MATTRESSES USING WIRE MESH

503.1 Description

This section covers the construction of gabion walls and mattresses for the construction of retaining walls, lining of channels, revetments, aprons and other anti-erosion structures to hill slopes, filling slopes, stream banks and etc.

The Gabions/mattresses shall be flexible, box/mattresses shape with PVC galvanized steel wire mesh cages of rectangular sides, packed with rock and in constructing the walls/mattresses, as indicated in Drawings or as directed by the Engineer.

503.2 Materials

Unless otherwise specified the material used shall meet the following requirements.

a) Double twisted hexagonal mesh made of PVC coated galvanized mild steel conforming to BS 1052:1980, BS 443:1982.

b) Binding and connecting wire of at least 3.2 mm diameter PVC galvanized to the same standard as the mesh wire.

c) Broken rock for filling baskets shall preferably be of sizes normally varying from about 100 mm in minimum dimension to about 500 mm in maximum dimension and they shall be clean, hard and durable, free from weathered pieces and extraneous matter. The rock shall be reasonably well graded between the two limiting size.

d) Where indicated on the Drawings or ordered by the Engineer, a layer of filter fabric, or approved equivalent material shall be placed on the prepared surface prior to the placing of the gabions. The filter fabric shall be placed as instructed in vertical strips with a minimum overlap 300 mm and shall be properly fastened to prevent any movement or slipping during the placing of gabions.

e) The filter medium shall be Geotextile/filter fabrics to requirement given in Section 905 .

503.3 Construction Requirements

The hill slopes, filling slopes or stream banks which the Gabion walls are to abut shall be suitably trimmed and the ground on which the Base of gabion walls is to be constructed shall be leveled and compacted required.

Where no firm Base layer is specified the ground shall be well compacted and leveled prior to placing of the gabions as specified in Drawings or as required by the Engineer. A thin layer of Nominal single graded aggregates shall be spread over the compacted base, if required by the Engineer. Basket shall, where appropriate, be maintained square and with an inclination as specified in Drawings or as instructed by the Engineer during filling. Internal tie wires shall be inserted and baskets shall be tensioned.

The wire basket for gabions shall be made out of double twisted hexagonal mesh. The size of gabion boxes will be 1 m x 1 m x 1 m or as instructed by the Engineer. The length shall be multiples of one metre subject to a maximum of 4.0 m. The gabions shall have diaphragm walls at 1.0 m intervals.

Table 503-1: The general Specifications of gabions are as follows:

Thickness (mm)	Mesh Type (mm x mm)	Min. Core Wire Dia. (mm)	Min. Wire Dia. With PVC Coating (mm)	Stone size (mm)	D_{50} (mm)
500	100 x 120	2.70	3.20	100 – 500	250
1000	100 x 120	2.70	3.20	100 – 500	250

The filling of baskets shall be carried out in-situ, unless otherwise directed. This requires that the empty baskets, open on the top, be positioned on the Base or top of the gabions and in-filled with the rock pieces in such a manner as to completely fill up the baskets leaving only the minimum of voids prior to closing and securely tying the lid using wire of approved gauge. In building the wall the gabions shall be placed with staggered joints and where so required they shall be tied together using standard of wire.

The cut edges of all mesh used in the construction of gabions, except the bottom edge of the diaphragms and end panels, shall be selvedge with PVC galvanized wire having a diameter of at least 0.5 mm more than that of the mesh wire.

The diaphragms and end panels shall be selvedge on the top and vertical sides only.

Sufficient binding and connecting wire shall be supplied with the gabion cages to perform the connecting operations in accordance to these Specifications. The diameter of the wire shall be at least 3.2 mm.

The methods of assembly shall be in accordance with the manufacturer's instructions but the Contractor shall ensure that sufficient connecting wire braces are provided to prevent deformation of the cages as they are being filled with stone.

It is essential that the corners of the gabions / cages be securely wired together to provide a uniform surface and to ensure that the structure does not appear as a series of blocks or panels.

Particular care shall be exercised in filling visible faces of gabion boxes, for which only selected stones of adequate size shall be used and be so pre-packed that a fair faced finish is obtained. The filling of boxes shall be done in stages in order to prevent deformation and bulging.

As the wall is being constructed the spaces between the gabions and the slopes shall be backfilled in stages with granular backfill material after placing the filter behind gabion wall. After which the granular backfill material shall be compacted well by rolling and other suitable means approved by the Engineer without damaging the filter fabric.

The filling of mattresses shall be carried out by spreading, random stones on the first layer and using selected stones for the top layer so as to present a dry stone-pitch surface.

503.4 Test and standards of acceptance

The materials shall be tested in accordance with these Specifications and shall meet the prescribed criteria. The work shall conform to these Specifications and shall meet the prescribed standards of acceptance.

503.5 Measurement & Payment

a. Measurement

The gabion walls shall be measured in Cu. m, completed and accepted.

The filter fabric and mattresses shall be measured in Sq. m.

The base of the wall shall be measured in Cu. m, completed and accepted.

b. Payment

The quantities determine for gabion walls as provided above shall be paid for at the Contract unit rate which price shall be full compensation for all labour, materials, tools and incidentals necessary for completion of the work including mesh, assembling, tying, fixing, staking, tensioning, fill and compacting.

The quantities determine for gabion base preparation as provided above shall be paid for at the Contract unit rate which price shall be full compensation for all labour, materials, tools and incidentals necessary for completion of the work including rubble compacting, cutting and shaping the slopes and forming the ground and preparing the base (using rubble) on which the wall was built.

The Pay Items and Pay Units shall be as follows:

Pay Item	Description	Pay Unit
503(1)	Gabion wall (PVC coated galvanized wire)	Cubic meter
503(2)	Filter fabric/Geotextile	Square meter
503(3)	Base preparation for gabion wall	Cubic meter

504 CHAIN LINK FENCE

504.1 Description

This work shall consist of construction of safety fences of the type indicated and constructed in accordance with the Specification and with the dimensions, lines and levels indicated in Drawings or as instructed by the Engineer. Chain link fence shall conform to BS 1722:1 unless otherwise specified.

504.2 Materials

Unless otherwise specified the material used shall meet the following requirements.

a) Steel section for posts to SLS 829/ BS EN 10210-1 and BS EN 10210-2
b) Chain link mesh for fences galvanized and PVC coated to SLS 1148/ BS EN 10245-2
c) Anti-corrosive paints and enamel paints for steel sections to SLS 713

Table 504-1: Chain link mesh properties

	Property	Requirements	Reference
1	Mesh construction	Interlocking of steel wire which provide approximately square meshes	BS EN 10245-2 (Steel wire chain link fencing)
2	Tensile strength of wire	350 MPa (min)	To EN 10218-1
3	Diameter of steel core wire	1.8 mm (min)	To EN 10218-2/ SLS 1148
4	Diameter of plastic-coated wire	2.6 mm (min)	To EN 10245-2/ SLS 1148
5	Mesh width (opening size)	45 - 55 mm	Distance measured at right angles internally between adjacent parallel wires
6	Corrosion protection	HD Galvanized/ Galvanized or Zinc coated to (Class D) (Zn)	To EN 10244-2
7	Coating mass	35 g/m^2 (min)	To EN 10244-2

504.3 Construction Requirements

Prior to planting the fence posts in the required manner, the ground should be graded where necessary, so as to provide a neat appearance of the fence line. All the post shall be set vertically. The posts shall be embedded in concrete and the Contractor shall install temporary supports as may be required to hold the posts in proper positions, until such time as the concrete has set sufficiently to hold the posts. Unless otherwise specified a minimum period of 7 days shall be allowed before such posts are subjected to any stress. Bracing shall be provided to posts where specified or where required by the Engineer.

Chain link mesh (core wire – minimum 3.0 mm diameter) of the type and size required, shall be firmly attached to the fence, a braced in the manner indicated in the Drawings or directed by the Engineer. All Chain link mesh shall be stretched out and shall be installed to the required elevations.

504.4 Test and standards of acceptance

The materials shall be tested in accordance with these Specifications and shall meet the prescribed criteria. The work shall conform to these Specifications and shall meet the prescribed standards of acceptance.

504.5 Measurement & Payment

a. Measurement

Unless otherwise specified, fence shall be measured by the linear meters as accepted by the Engineer.

b. Payment

The unit rate of payment for each item of work shall be full compensation for all labour, equipment, tools, materials, and incidentals necessary to complete the work including painting as specified and concreting works as shown in the drawings.

The Pay Items and Pay Units shall be as follows:

Pay Item	Description	Pay Unit
504(1)	Chain link fence – minimum 3.0 mm core diameter (specify the height of fence)	Linear meter

505 DRAINAGE WELL

505.1 Description

This work shall consist of constructing wells and providing associated facilities in order to collect water from the land slide / slope failure prone areas and safely discharge the water so collected into natural or man-made canals or drains.

Well excavation shall consist of all the required excavation within the well. The work shall include the removal, stockpiling, handling hauling and proper utilization in the works or disposal to spoil tips, located by the Contractor and approved by the Engineer, of all excess excavated material.

505.2 Materials

The materials used for drainage well shall meet the requirements of the following, unless otherwise specified.

a) Reinforcing steel to SLS 375, SLS 26 or BS 4449
b) Formwork used shall be of steel, timber or any other material approved by the Engineer conforming the Section 605 .
c) Cement used shall conform to requirements of Section 902 of the Specifications.
d) The dowels shall be of mild steel having mechanical and physical properties specified in Section 606 .
e) PVC pipes and fittings to SLS 147.

The Discharge pipe shall be of rigid un-plasticized polyvinyl chloride (UPVC) complying with SLS 147 – PNT 11 unless otherwise specified.

505.3 Construction Requirements

a. Method Statement

The Contractor shall submit the Methods Statements and Working Drawings to the Engineer, for his approval, at least 28 days prior to the commencement of the relevant activity. The Method Statement shall clearly spell out the method the Contractor proposes to carry out the construction / fabrication of the Permanent Works and Temporary Works including the quality control procedures as per this Specification. The Contractor shall also provide the details of safety measures, equipment and the personnel to be deployed to carry out the works.

b. Check Boring

Since the drainage wells were designed based on the subsurface conditions. The Contractor shall carry out check boring with continuous sampling so as to identify the slip surface depth, soil profiles and ground water levels, prior to the commencement of the works. The location of the check borings shall be the center of the proposed drainage well approved by the Engineer.

The check borings shall be drilled using rotary type boring machines and wash boring is not allowed. The diameter of the holes shall be between 50 and 100 mm.

The Contractor shall carry out continuous sampling and standard penetration tests at 1.0m intervals during check boring as per BS 5930:2015.

Within 07 days of the completion of the drilling of each hole, the Contractor shall submit a drilling report to the Engineer, accurately describing the boundaries of the geological formations, water level in the drill-hole etc. The format of the drilling report shall have the prior approval of the Engineer.

The Engineer may change the designs, particularly the depth of the drainage well, based on the results of the check borings.

c. Well Rings

Well rings of dimensions as per the Drawings, shall be casted within the site premises and rigs cast in a separate location without the supervision of the Engineer are not accepted. Formwork for the well rings shall accordance with the Section 605 and special attention shall be given to form the circular shape of the rings. Reinforcement shall accordance with the Section 602 . Concrete for the well rings shall accordance with the Section 601 and all quality control and quality assurance procedures shall be followed as per this Specification. Concrete should achieve the characteristic strength as show in the Drawings prior to moving from casted location and installation unless otherwise instruct by the Engineer.

d. Well Digging and Installation of Well Rings

The location where the well as shown on the Drawing shall be cleared as per Section 201 , before the commencement of the excavation. The methodology of excavation shall be selected considering the soil properties, design requirements, ground conditions and the site conditions. All exaction works shall accordance with the Section 302 . Motorized machinery shall be used for excavation, in order to overcome the oxygen deficiency. If rock or boulders are encountered in the well, chemical blasting method as per Section 305 shall be used for blasting them. To avoid the collapse of the well walls, before the well rings are installed, the unsupported depth of excavation shall not exceed 0.5 m at any time. The water entering the dug pit shall be removed by suitable methods, in order to facilitate trouble free excavation.

The installation of well rings shall progress along with the excavation as shown in the Drawings. The ladder shall be installed after completion of excavation, installation of well rings, horizontal underground drainage installation, discharge drainage installation and removal of all scaffolding and temporary works except those which are needed for the installation of ladders.

The surplus material resulting from the excavation shall be disposed to the dumping yards as per Section 302 .

Samples of material encountered during excavation shall be collected at every 0.5m from the top of the well and at places the type of material changes. These samples shall be neatly packed in transparent polythene and appropriately labelled for easy identification and interpretation. The label shall include information such as identification number, location within the well where the sample was collected etc. Collection of samples and submission of excavation reports with photographs to the Engineer shall be carried out within 24 hrs after completion of the excavation work.

In case a type of soil, derived from landslide movement and found at slip surfaces, is encountered, the Contractor shall report it to the Engineer and secure undisturbed sample of that soil for the use of laboratory testing. The manner to obtain and storage undisturbed sample of that soil shall be proposed by the Contractor and approved by the Engineer.

Immediately after the excavation is completed for each 0.5 m and before the installation of the well rings, the Contractor shall make records of excavated walls by taking photographs and sketches. Based on such information, within 24 hrs of the completion of the excavation, the Contractor shall submit an excavation report to the Engineer, accurately describing the boundaries of the geological formations, seepage of water or volume of groundwater pumped out from the well. The format of the excavation report shall have the prior approval of the Engineer.

e. Drilling and Installation of Discharge Pipe

The contractor shall use appropriate equipment for drilling the holes, taking into consideration the factors such as soil properties, ground conditions, design requirements, site conditions etc. The design requirements include, among other things, the diameter of the non-perforated PVC pipe. The bore hole shall be protected by temporary casings of appropriate diameter till the non-perforated PVC pipes are in place. No payment shall be made for provision and insertion of these temporary casings and the rate for non-perforated PVC Pipe shall be deemed to compensate for this.

The Contractor shall pull out the drilling rods, in the presence of the Engineer and the length of the drilling rods shall be measured by the Engineer and the Contractor, which shall form the basis of deciding the length of the drill-hole.

The drill holes shall be within the following tolerances:

Category	Tolerance (mm)
Length	Design length + 100
Displacement	100.0
Direction	±2.5 degrees in any direction

Before the commencement of the installation, the Contractor shall obtain permission from the Engineer to do so. The non-perforated PVC pipes shall be installed into the whole length of the drill hole. These pipes shall be inserted through the mouth of the drill hole which is away from the drilling machine and the temporary casing shall be withdrawn from the mouth of the drill hole which is closer to the drilling machine. If the pipes are to be connected, the connections shall be sturdy so that there will be no loosening of connections.

f. Drilling and Installation of Perforated Horizontal Drains

Drilling for horizontal perforated pipes and installation of perforated pipes shall be in accordance with Section 702 of these Specifications.

g. Base Concrete

The Base Concrete for the Well shall be constructed as per the details given in the Drawings or as instructed by the Engineer. All concrete work shall accordance with the Section 601 .

h. Fence

The Fence for the Well shall be constructed as per the details given in the Drawings or as instructed by the Engineer.

The fence shall have a name plate giving the relevant details for the easy identification of the drainage well.

Fence shall accordance with the Section 0.

i. Cover for the Well

The Cover for the Well shall be constructed as per the details given in the Drawings or as instructed by the Engineer. The door plate of the cover shall have a robust and weather proof locking device.

505.4 Test and standards of acceptance

The materials shall be tested in accordance with these Specifications and shall meet the prescribed criteria. .The work shall conform to these Specifications and shall meet the prescribed standards of acceptance.

505.5 Measurement & Payment

a. Measurement

Excavation

All excavation shall be measured in cubic meters in accordance with Section 302.4 .

Well Rings

Measurement of Concrete well rings shall be in cubic meters including the ladders within the volume measured depth. Reinforcement and Formwork for concrete shall be measured separately in kilograms and in square meter respectively.

Base Concrete

Base concrete shall be measured in cubic meters. Reinforcement and Formwork for concrete shall be measured separately in kilograms and in square meter respectively.

Discharge Pipe

Discharge pipe shall be measured in linear meters.

Horizontal Drains

Horizontal drains shall be measured in linear meters in accordance with Section 702.4 .

Well Cover

Well cover shall be measured in cubic meters. Reinforcement and Formwork for concrete shall be measured separately in kilograms and in square meter respectively.

Fence

Fence shall be measured in linear meters in accordance with Section 504.5 .

b. Payment

All prices shall include full compensation for all labour, materials, tools, equipment, incidentals, etc. necessary to complete the work which includes but not limited to logging, sample collection, storing, report preparation pursuant to these Specifications and in addition shall include the following where applicable

- Setting out

- Planking and any other precautionary measure taken to ensure the stability of adjacent areas.
- Removal of excess or unsuitable materials, logs, stumps etc.
- Safety measures
- Measures required for working under restricted conditions.
- Laboratory and field testing
- Dewatering

Excavation

All excavations shall be paid in accordance with Section 302.4

Well Rings

The quantities determine for well rings as provided above shall be paid for at the Contract unit rates which price shall be full compensation for all labour, materials, tools and incidentals necessary for completion of the work including well rings casting (including formwork, reinforcement and concreting) and installation, ladder fabrication and installation, fabrication and installation of all accessories of the well rings.

Base Concrete

This shall be paid at the Contract unit rates for the formwork, reinforcement and concrete according to the Drawings and these Specifications and to the satisfaction of the Engineer.

Discharge Pipe

The quantities determine for discharge pipe as provided above shall be paid for at the Contract unit rate which price shall be full compensation for all labour, materials, tools and incidentals necessary for completion of the work including drilling, fabrication and installation of discharge pipe, connecting the well outlet to the pipe and preparation of pipe outlet.

Horizontal Drains

Horizontal drains shall be paid in accordance with Section 702.4 including connecting the well inlet to the pipe and preparation of pipe inlet.

Well Cover

The quantities determine for well cover as provided above shall be paid for at the Contract unit rates which price shall be full compensation for all labour, materials, tools and incidentals necessary for completion of the work including fabrication, transportation to the site and installation.

Fence

Fence shall be paid accordance with Section 504.5 .

The Pay Items and Pay Units shall be as follows:

Pay Item	Description	Pay Unit
302(1)	Excavation for structures, soil suitable for filling including soft rock for reuse	Cubic meter
302(3)	Excavation – Hard rock, chemical blasting	Cubic meter
302(7)	Disposal of excess soils away from site	Cubic meter
504(1)	Chain link fence – minimum 3.0 mm core diameter (specify the height of fence)	Linear meter
601(3)	Concrete C25/20 for well ring, base and well cover	Cubic meter
602(1)	Tor – Steel reinforcement for well ring, base and well cover	Kilograms
605(1)	Formwork for concrete sides of drains plain smooth finish	Square meter
505(1)	Discharge pipe – PNT 11	Linear meter
505(2)	Check boring	nos
702(1)	Horizontal drains of perforated PVC pipe (specify diameter) – PNT 11	Linear meter

506 BOULDER PACKED WALL

506.1 Description

This work shall consist of construction, in random boulders, of walls by stably stacking. Work shall be carried out in accordance with this Specification and with the lines and dimensions shown in the Drawings, or as directed by the Engineer.

506.2 Materials

Stones used in the boulder pack shall be obtained from the Site unless otherwise specified by the Engineer. They shall be reasonably hard, durable, free from fractures, highly-weathered portions, extraneous matter and shall generally be of maximum dimension not exceeding 800 mm.

Stones shall be specially made to required sizes and shapes on site to ensure good packing to achieve minimum void ratio.

Where indicated on the Drawings or ordered by the Engineer, a layer of filter fabric, or approved equivalent material shall be placed on the prepared surface prior to the placing of the boulders. The filter fabric shall be placed as instructed in vertical strips with a minimum overlap 300 mm and shall be properly fastened to prevent any movement or slipping during the placing of boulders.

The filter medium shall be Geotextile/filter fabrics to requirement given in Section 905 .

506.3 Construction Requirements

The hill slopes, filling slopes or stream banks which the boulder packed walls are to abut shall be suitably trimmed and the ground on which the Base of walls is to be constructed shall be leveled and compacted as required.

Larger stones shall be set in such a manner that they are interlocked with adjacent stones and spalls, and chips shall be wedged into the resulting hollow spaces using a hammer where necessary. The stones in each course shall overlay the joints in the preceding course as far as practicable. The faces of the wall shall be constructed with stones having straight edges to provide close fitting edges.

Through stones where specified shall be used as indicated in subsection 603.3 a.

Particular care shall be exercised shall be taken not to damage the geotextile filter medium when placing boulders during construction. In the event of damage, the geotextile shall be replaced at the Contractor's cost, before proceeding with the work.

506.4 Tests and Standards of Acceptance

The materials shall be tested in accordance with these Specifications and shall meet the prescribed criteria. The work shall conform to theses Specifications and shall meet the prescribed standards of acceptance.

506.5 Measurement and Payment

a. Measurement

Boulder pack shall be measured in Cu.m of completed and accepted work.

The filter fabric and mattresses shall be measured in Sq. m.

b. Payment

The unit rate of payment for each item of work shall be full compensation for all materials, labour, tools and incidentals necessary to complete the work. No separate payment will be made for necessary trimming of local voids in the excavated or filled surface against which rubble masonry is placed.

The Pay Items and Pay Units shall be as follows;

Pay Item	Description	Pay Unit
506(1)	Boulder packed Wall	Cubic meter
503(2)	Filter fabric/Geotextile	Square meter

507 DEBRIS BARRIER

507.1 Description

This work shall consist of construction of debris barriers of the type indicated and constructed in accordance with the Specification and with the dimensions, lines and levels indicated in Drawings or as instructed by the Engineer.

507.2 Materials

Unless otherwise specified the material used shall meet the following requirements.

a) Structural steel shall comply with the requirements of the designated standards as listed out in clause 3.1 of BS 5400: part 6: 1999
b) Corrosion protection; Hot-dip galvanized minimum coating thickness of 85 micro-meters or 600 g/m2 to AS/NZS 4680 or BS EN ISO 1461
c) Structural concrete shall conform to subsection 601

507.3 Materials Handling and Storage

Cement shall be stored properly to prevent moisture degradation and partial hydration. Cement that has been caked and lumpy shall be rejected and discarded.

Contractor shall suitably protect steel sections against mechanical damage, weld splash, contamination by marine spray and gross industrial atmospheric contamination. Store steel reinforcement in straight lengths. All steel sections shall be stored in clean and dry conditions.

Galvanized steel sections shall be carefully handled to avoid punctures, fractures or wear of the galvanizing. Dragging bare or galvanized steel reinforcement across abrasive surfaces or through deleterious materials such as surface soil shall be avoided.

Damage to the steel sections as a result of abrasion, cuts, nicks, welds and weld splatter shall be causes for rejection. Steel sections shall be clean from dirt, rust and other deleterious substances prior to installation. Heavy corrosion or pitting of steel sections shall be cause for rejection.

507.4 Construction Requirements

Prior to planting the steel posts in the required manner, the ground should be graded where necessary, so as to provide a neat appearance of the barrier line. Excavations for the steel posts shall be carried out in a neat manner taking all precautionary measures to prevent the sides of the excavation from collapsing. No additional payment shall be made for over exaction or for excess concrete required to fill over excavations. All the steel posts shall be set vertically. The posts shall be embedded in concrete and the Contractor shall install temporary supports as may be required to hold the posts in proper positions, until such time as the concrete has set sufficiently to hold the posts. Unless otherwise specified a minimum period of 7 days shall be allowed before such posts are subjected to any stress. Bracing shall be provided to posts where specified or where required by the Engineer.

507.5 Test and standards of acceptance

The materials shall be tested in accordance with these Specifications and shall meet the prescribed criteria. The work shall conform to these Specifications and shall meet the prescribed standards of acceptance.

507.6 Measurement & Payment

a. Measurement

Unless otherwise specified, steel posts shall be measured by the linear meters as accepted by the Engineer. Concrete shall be measured as per subsection 601 .

b. Payment

The unit rate of payment for each item of work shall be full compensation for all labour, equipment, tools, materials, and incidentals necessary to complete the work including painting as specified and concreting works as shown in the drawings.

The Pay Items and Pay Units shall be as follows:

Pay Item	Description	Pay Unit

507 (1)	Galvanized H Irons for Debris Barrier	Linear meter
601 (3)	C25/20 Concrete	Cubic meter
601 (1)	C15/20 Concrete	Cubic meter
302(1)	Excavation for structures, soil suitable for filling including soft rock for reuse	Cubic meter
302(2)	Excavation for structures – Boulders (0.25 m^3-1.0m^3), specify the method of blasting	Cubic meter
302(3)	Excavation for structures – Hard rock, specify the method of blasting	Cubic meter

600 CONCRETE AND OTHER STRUCTURES

601 CONCRETE FOR STRUCTURES

601.1 Concrete Grades

Concrete grades shall be defined per BS 5328 as follows;

Table 601-1: Concrete Grades

Grade	Characteristic Strength (MPa)
C15	15
C20	20
C25	25
C30	30
C40	40
C50	50

The maximum size of coarse aggregate shall be 20 mm for all grades except for C15 for which 40 mm shall be permitted.

601.2 Minimum Cement Content and Water/Cement Ratio

The minimum cement content and water / cement ratio for different grades of concrete shall be as follows:

Table 601-2: Minimum Cement Content and Water / Cement Ratio

Type of Concrete	Minimum cement content (kg/ m^3)	Maximum free water/cement ratio
Unreinforced	275	0.65
Reinforced	300	0.60
Pre-stressed	325	0.55

The cement content shall not exceed 550 kg/m^3.

601.3 Volume Proportioning of Concrete

The nominal mixes that are in general use along with the grade of concrete shall be as follows;

Table 601-3: Nominal Mixes

Grade	Characteristic Strength (MPa)	Nominal Mix Proportions
C15	15	1:3:6
C20	20	1:2:4
C25	25	1:1 ½:3

Cement shall be considered to have a nominal weight of 1140 kg/m^3. On this basis the equivalent volume of 50 kg bag of cement shall be 0.035 m^3 which shall be considered as the unit volume of cement for volume batching.

In batching aggregates, the unit volume of cement shall be considered the unit volume and unit volume boxes shall be made to internal dimensions of 400 mm x 350 mm x 250 mm which equals 0.035 m^3.

The Contractor may use different dimensions for these boxes with the approval of the Engineer provided the internal volume equals 0.035 m^3 or a convenient fraction of this volume.

601.4 Workability of Concrete

The concrete shall be of suitable workability for full compaction to be obtained. The slump shall be measured in accordance with BS 1881.

Table 601-4: Workability of Concrete

Use of Concrete	Nominal Slump	Permitted Deviation
Reinforced Concrete in slabs, beams, walls, precast components and columns	75mm	± 25
Reinforced Concrete in slabs, beams, walls, precast components and columns containing congested reinforcement	125 mm	± 25

601.5 Chloride and Sulphate Content

The Chloride and Sulphate contents in concrete from all sources shall conform to values as per the Table 601-5.

Table 601-5: Chloride and Sulphate Contents in Concrete

Type or Use of cement	Maximum total Chloride content expressed Chloride ions by mass of cement	Maximum total acid soluble sulphate content expressed as SO_3 by mass of cement
Pre-stressed concrete or steam cured reinforced concrete	0.1 %	4%
Concrete made with Sulphate resisting Portland cement to BS 4027	0.2 %	4 %
All other	0.3 %	4 %

601.6 Trial Mixes

The Contractor shall prepare trial mixes having workability, strength, and surface finish criteria, to satisfy the Engineer regarding these qualities. The trial mixes shall be made and compacted in the presence of the Engineer; using the same type of plant and equipment as will be used for the works. The concreting plant and means of transport employed to make the trial mix and to transport them representative distances shall be similar to the corresponding plant and transport to be used in the Works.

From each trial mix, test cubes shall be taken as follows. For each mix a set of six cubes shall be made from each of three consecutive batches. Three from each set of six shall be tested at an age of 28 days and three at an earlier age approved by the Engineer. The cubes shall be made, cured, stored, transported and tested in accordance with BS 1881. The tests shall be carried out in a laboratory approved by the Engineer.

From the same mix as that from which the test cubes are made, the workability of the concrete shall be determined by the Slump Test in accordance with BS 1881 or other method approved by the Engineer. The remainder of the mix shall be cast in a metal mold and compacted. After 24 hours the sides of the mold shall be struck and the surface examined in order to satisfy the Engineer that an acceptable surface can be obtained with this mix

A trial mix for a particular grade shall be accepted when the average strength of the nine cubes, tested at 28 days exceeds the specified characteristic strength by the current margin minus 3.5MPa. In addition, the consistency shall be to the satisfaction of the Engineer.

The characteristic strength of the various classes of concrete shall be determined as soon as the first 30 test results of each class become available.

The characteristic strength shall be calculated by the equation:

$$X_0 = \bar{X} - kS$$

Where: X_0 : Characteristic strength,

$\bar{X}$: Mean or average of the series of results
k : 1.64
S : Standard deviation given by the equation:

$$S = \{\Sigma(X - \bar{X})^2 / (N - 1)\}^{1/2}$$

Where X : the individual result
N : the total number of results

When a proposed mix has been approved, no variations shall be made in the mix proportions, or in the type, size, grading zone or source of any of the constituents without the consent of the Engineer who may require further trial mixes to be made before any such variation is approved. Until the results of trial mixes for a particular grade have been approved by the Engineer, no concrete of the relevant grade shall be placed in the works.

When the Contractor intends to purchase factory–made precast concrete units, trial mixes may be dispensed with provided that evidence is given to satisfy the Engineer that the factory regularly produces concrete, which complies with the Specification. The evidence shall include details of mix proportions, water-cement ratios, slump and strengths obtained at 28 days.

601.7 Sampling and Testing

The Contractor shall take samples of the concrete for testing. The number, frequency, and location shall be decided by the Engineer.

Unless otherwise requested by the Engineer, cube tests shall be made at the rate of 1 set of cubes per $10m^3$ of concrete. The times of day at which samples are taken shall be chosen at random. At least one sample shall be taken on each day that a particular grade is used.

The procedure for sampling and making cubes and testing shall be carried out strictly in the manner described in BS 1881. In addition, the Engineer may order at his own discretion, additional samples of concrete to be cured at the job site, in order to verify actual strengths obtained.

For cubes tested at an age of 28 days the cube strength shall conform to the following requirements:

(a) The average strength determined from any group of four consecutive test cubes shall exceed the specified characteristic strength by at least 0.5 times the current margin
(b) Each individual test result shall be greater than 85% of the specified characteristic strength.

If the average strength of any group of four consecutive test cubes fails to meet the first requirement (a) then all concrete mixed in all batches from the first batch to the last batch from which samples were taken to make the test cubes, together with all the intervening batches shall be deemed not to comply with the strength requirements.

If only one cube fails to meet the second requirement (b) then that result may be considered to represent only the particular batch of concrete from which that cube was taken.

The Contractor shall take such remedial action as the Engineer may order, including the removal of the relevant concrete, and shall, before proceeding with the concreting, submit for the Engineer's approval details of the action proposed to ensure that the concrete complies with the requirements of the Specification.

Acceptance criteria shall be that the average 28 days compressive strength of 3 cubes exceeds the characteristic strength of the concrete and that the difference between the greatest and least strength is not more than 20 percent of the average.

The 7 days test results shall generally be made use of as an indicator of the strength at 28 days and unless otherwise decided by the Engineer, no decision regarding non-acceptance of the concrete shall be made using these results.

601.8 Materials

a. Portland cement

Cement shall conform to the provisions of the following British Standards or the corresponding Sri Lanka Standard:

BS 12 or SLS 107 – Ordinary Portland Cement (ordinary and rapid hardening)

BS 146 Portland – Blast furnace cement

BS 4027 Sulphate–resisting Portland cement

BS 1370 Low heat Portland cement

BRE Special Digest 1:2005 – Sulphate–resisting Portland cement

The Contractor shall provide suitable means of storing and protecting the cement against dampness. Fully covered storage areas with floors protected from rising dampness shall be provided. Bagged or bulk cement which has become partially set or which contains lumps of caked cement shall be rejected. The use of cement reclaimed from discarded or used bags will not be permitted.

b. Water

The water used in mixing or curing concrete shall be tested by methods described in BS 3148. All water shall be clean and free from salt, oil or acid, vegetable or other substance injurious to the finished product. Sources of water shall be maintained at such a depth and the water shall be withdrawn in such a manner as to exclude silt, mud, grass or other foreign materials. Water from the sea or tidal rivers shall not be used.

Potable water supplied by the National Water Supply and Drainage Board (NWSDB) shall normally be acceptable.

c. Admixtures

Admixtures shall not be used without the written approval of the Engineer. The Contractor shall submit technical data of any admixtures he proposes to use to the Engineer at least 28 days prior to the date of placing orders for such giving particulars of the structure on which he intends to use such admixtures.

Admixtures containing Calcium Chloride in any form are not permitted.

d. Aggregate

Unless otherwise specified or agreed by the Engineer aggregate shall comply with the requirements given under Clause 901 (aggregates from natural sources for concrete, including granolithic).

Fine Aggregate

The grading of fine aggregate when determined by a test according to BS 882 shall be within the limits of one of the grading zones given in the Table 901-3 in Section 900 .

The fine aggregate shall be described as fine aggregate of the grading zone into which it falls - e.g. BS 882, Grading Zone C, M, F or Overall.

Coarse Aggregate

The grading of coarse aggregate, when determined by a test according to BS 882 shall be within the limits of one of the grading given in Table 901-2 in Section 900 .The nominal maximum size of aggregate shall be 20 mm for reinforced concrete and 40 mm for un-reinforced concrete.

For the control of Alkali–Silica reaction non–reactive aggregates shall be used. Provided they are not contaminated with opal, tridymite or cristobiline or contain more than 20% (by weight) of chert, flint or chalcedony. The following types of aggregate are considered to be non–reactive Dolerite, Dolomite, Feldspar, Gneiss, Granite, Limestone, Schist and Tuff. On no occasion shall the amount of equivalent sodium oxide exceed 3.0 kg in any cubic meter of concrete.

The Engineer will permit hand broken stone to be used as coarse aggregate for Grade C15 concrete.

All aggregates shall be stored in such a way that they shall be kept free from contact with deleterious matter. Aggregates of different sizes shall be stored separately and in such a way as to avoid segregation in each stockpile.

The Contractor shall provide copies of the results of routine control tests carried out by the aggregate producer and obtain the Engineer's approval prior to placing orders.

601.9 Equipment and Tools

a. General

Equipment and tools necessary for handling material and performing the work, and satisfactory to the Engineer as to design, capacity and mechanical condition, shall be at the site of work before work is started.

If any equipment is not maintained in full working order or if the equipment as used by the Contractor proves inadequate to obtain the results prescribed, such equipment shall be improved or other satisfactory equipment substituted or added at the direction of the Engineer.

b. Mixers

General

All concrete shall be mixed in batch mixers manufactured in accordance with BS 1305 or tested in accordance with BS 3963. It may be mixed at the site of construction, at a central plant or in transit. Each mixer shall have attached to it in a prominent place a manufacturer's plate showing the capacity of the drum in terms of volume of mixed concrete and the speed of rotation of the mixing drum.

Mixers at site of construction

Mixers at the site shall be approved drum-type capable of combining the aggregate, cement and water into a thoroughly mixed and uniform mass within the specified mixing period and of discharging the mixture without segregation. The mixer shall be equipped with a suitable charging hopper, water storage, and a water-measuring device, accurate within 1%. Controls shall be so arranged that the water can be applied only while the mixer is being charged.

The discharge lever shall lock automatically until the batch has been mixed the required time after all materials are in the mixer. Suitable equipment for discharging the concrete in the form shall be provided. The mixer shall be cleaned at suitable intervals. The pick-up and throw over blades in the drum shall be replaced when they have lost 10% of their depth. Concrete transport trucks shall not be used to mix concrete.

601.10 Placing Concrete

a. General

Concrete shall be placed in such a manner as to avoid segregation and the displacement of reinforcing bars and shall be spread in horizontal layers where practicable. Concrete shall be placed where necessary inside forms by hand shovels and in no instance shall vibrators be so manipulated to transport concrete inside formwork. Care shall be taken to prevent mortar from spattering on forms and reinforcing steel and from drying ahead of the final covering with concrete. Where spattering has occurred, the forms and steel shall be cleaned with wire brushes or scrapers before concrete is placed around steel or in forms. Troughs, pipes or short chutes used as aids in placing concrete shall be positioned in such a manner that segregation of the concrete will not occur. All chutes, troughs, and pipes shall be kept clean and free from coating of hardened concrete or mortar.

Concrete shall be thoroughly compacted by vibration, unless otherwise agreed by the Engineer, during the operation of placing, and thoroughly worked around the reinforcement, tendons or duct formers, around embedded fixtures and into corners of the formwork to form a solid mass free of voids. When vibrators are used to compact the concrete, vibration shall be applied continuously during the placing of each batch of concrete until the expulsion of air has practically ceased and in a manner that does not promote segregation of the ingredients.

Vibration shall not be applied by way of the reinforcement. Where vibrators of the immersion type are used, contact with reinforcement and all inserts shall be avoided as far as is practicable.

Concrete shall not be subject to disturbance between 4 hours and 24 hours after compaction except with the agreement of the Engineer. Wherever vibration has to be applied externally, the design of formwork and disposition of vibrators shall ensure efficient compaction and the avoidance of surface blemishes.

There shall be no excess water on the top surface on completion of compaction.

Concrete shall not be dropped freely over a vertical distance of more than 1.20 meters

Concrete shall be placed continuously throughout each section of the structure or between joints if shown on the Drawings or as directed by the Engineer. If, in an emergency it is necessary to stop placing concrete before a section is completed, bulkheads shall be placed as the Engineer may direct and the resulting joint shall be deemed a construction joint.

Concrete shall not be pumped or discharged via Aluminum alloy conduits or chutes.

Concrete shall not be subject to disturbance between 4 hours and 24 hours after compaction except that re-compaction of the upper layers of deep lifts to prevent or annul settlement cracking may be carried out.

b. Concrete Columns

Concrete in columns shall be placed in one continuous operation unless otherwise permitted by the Engineer.

c. Walls

Where walls, columns, struts, posts and other such structural members allow horizontal construction joints, concrete shall not be placed on top of other concrete which has not been allowed to set for 12 hours or more.

Work shall not be discontinued within 450mm of the top of any face, unless provision has been made for a coping less than 450mm thick, in which case, if permitted by the Engineer, the construction joint may be made at the underside of the coping.

d. Culverts

The slabs of box culverts shall be placed for their full depth in one layer and allowed to set not less than 12 hours before any additional work is done on them. The entire length of slabs between indicated construction joints shall be placed for their full depth or layer and allowed to set for not less than 12 hours before any additional work is done on these lengths.

Before concrete is placed in sidewalls, bottom slabs shall be cleaned of all shavings, sticks, sawdust and other extraneous material.

The Contractor shall submit to the Engineer for approval his proposals for pouring culvert walls before commencing culvert construction. Concrete shall not be placed in layers more than one metre high relative to the concrete already placed. Deposition shall proceed in a systematic manner.

e. Depositing Concrete under Water

Concrete shall not be deposited in water except with the approval of the Engineer and with his immediate supervision and in this case the method of placing shall be by tremie and as defined below.

Concrete deposited in water shall contain 10% by weight extra cement to that approved by the Engineer for the grade of concrete used. To prevent segregation, it shall be carefully placed in a compact mass, in its final position, by means of a tremie tube or pipe, or a bottom dump bucket and shall not be disturbed after being deposited. Special care shall be exercised to maintain still water at the point of deposit. Concrete shall not be placed in running water. The method of depositing concrete shall be so regulated as to produce approximately horizontal surfaces.

Concrete seals shall be placed in one continuous operation. When a tremie tube or pipe is used it shall consist of a tube or pipe not less than 250 mm in diameter. All joints in the tube shall be watertight. The means of supporting the tremie tube shall be such as to permit free movement of the discharge end over the entire top of the concrete and to permit it being lowered rapidly when necessary to choke off or retard the flow. The tremie tube shall be filled by a method that will prevent washing out of the concrete. The discharge end shall be completely submerged in concrete at all times and the tremie shall be kept full.

When concrete is placed with a bottom dump bucket, the bucket shall have a capacity of not less than one half cubic meter and the top of the bucket shall be open. The bottom door shall open freely downward and outward when tripped. The bucket shall be completely filled and slowly lowered to avoid backwash. It shall not be dumped until it rests on the surface upon which the concrete is to be deposited and when empty be withdrawn slowly until well above the concrete. The slump of the concrete used shall be maintained between 100 and 200 mm.

Dewatering shall proceed only when the concrete seal is considered strong enough to withstand any pressures to be exerted upon it. This time will be decided by the Engineer. All laitance or other unsatisfactory material shall be removed from the exposed surface by scraping, jetting, chipping or by other means, which will not injure the seal unduly.

f. Construction Joints

A concreting schedule shall be prepared for each completed structure and the Engineer shall approve the locations of construction joint on this concreting schedule. These locations shall not be altered, unless in case of emergency, when construction joints shall be positioned as directed by the Engineer.

At horizontal construction joints, gauge strips 20 to 30 mm square shall be placed inside the forms along all exposed surfaces to give the joints straight lines. Before placing fresh concrete, the surfaces of all construction joints shall be hammered with a sharp hand tool until the aggregate is exposed, cleaned and bonding agent shall

be applied. At the same time forms shall be checked to see that they are tight against the concrete already in place. Concrete in substructures shall be placed in such manner that all horizontal construction joints will be truly horizontal.

Where vertical construction joints are necessary, reinforcing bars shall extend across the joint in such a manner as to make the structure monolithic.

g. Precast Concrete Units

When the method of manufacture has been approved, no further changes shall be made without the approval of the Engineer.

The Contractor shall inform the Engineer in advance of the date of commencement of manufacture and casting of each type of unit.

A copy of all 28-day cube test results relating to the work shall be sent to the Engineer as soon as they become available.

601.11 Curing

All concrete surfaces shall be kept wet for at least 7 days after placing. Newly exposed concreted surface shall be covered with wet burlap immediately after final finishing of the surface. This material shall remain in place for the full curing period or may be removed and replaced with sand when the concrete has hardened sufficiently to prevent marring. In both cases the materials shall be kept thoroughly wet for the entire curing period. All other surfaces if not protected by forms shall be kept thoroughly wet, either by sprinkling or by the use of wet burlap until the end of the curing period. If timber forms are allowed to remain in place during the curing period, they shall be kept moist at all times to prevent the opening of joints.

The Contractor's proposals for the use of liquid membrane curing compound shall be subject to the approval of the Engineer.

601.12 Removal of Formwork and False work

a. Time of removal

The minimum period before striking forms shall be as shown in Table 601-6 subject to mandatory Engineer's approval. The Engineer's approval shall not relieve the Contractor of responsibility for the safety of the work. Blocks and bracing shall be removed at the same time as the forms and in no case shall any portion of the forms be left in the concrete.

Table 601-6 : Minimum period before striking formwork

Vertical forms of walls, columns, beams and similar components	24 hours
Soffit forms to culvert top slab (props left in)	10 days
Props to culvert top slab	21 days

Forms used on exposed vertical faces shall remain in place for periods, which shall be determined by the Engineer. False work and forms under slabs and beams shall remain in place for 21 days after the day on which placing of concrete were completed. When high early strength cement is used, forms for all structures may be removed after less than 14 days but only with the written approval of the Engineer who will decide the time for removal as a result of tests. Formwork and false work for the whole of special structures shall remain in place until such time as the Engineer will decide after all concrete has been poured.

b. Patching

As soon as the forms are removed, all wire or metal devices used for securing the formwork which project from or appear on the surface of the finished concrete shall be removed or cut back at least 25mm from the finished surface of the concrete. All holes, honeycombs and pockets so formed shall be filled with construction cement mortar mixed as per manufacture’s specifications, after the surface to be patched has been thoroughly cleaned and wetted to receive the patch.

c. Cause for rejection

Excessive honeycombing shall be sufficient to cause rejection of portions of the structure containing this honeycombing. The Contractor, on receipt of written orders from the Engineer, shall remove and rebuild such portions of the structure to Engineer's requirements.

601.13 Finishing Concrete

All concrete surfaces exposed in the completed work shall comply with the requirements where the Drawings indicate otherwise directed by the Engineer.

601.14 Tests and Standards of Acceptance

The materials shall be tested in accordance with these Specifications and shall meet the prescribed criteria. The work shall conform to these Specifications and shall meet the prescribed standards of acceptance.

601.15 Measurement and Payment

a. Measurement

Concrete shall be measured by the number of cubic meters complete in place and accepted. In computing quantities the dimensions used shall be those shown in the Drawings or ordered in writing by the Engineer but the measurement shall not include any concrete used for the construction of temporary works. No deduction from the measured quantity shall be made for holes, pockets, sockets and the like not exceeding 0.15 cubic meters each in volume, reinforcement or individual fillets, chamfers, splays, drips, rebates, recesses, grooves and the like of 100 mm total girth or less when measured over the faces in contact with the formwork.

b. Payment

Concrete work measured as provided above for the grade or grades of concrete specified, shall be paid for at the Contract unit price per cubic meter for concrete as detailed below. The payment shall be full compensation for furnishing, testing, placing and curing all materials, including labour, tools, equipment, etc., incidental thereto including the provision and construction of drainage falls and systems and weep holes, the forming of holes, pockets and sockets and the like not exceeding 0.15 cubic meters each in volume, forming construction joints and unformed surfaces. Separate payment will not be made for testing of concrete mixes the cost of which shall be included in the rate for concrete works.

Pay Item	Description	Pay Unit
601(1)	C15 Concrete (specify maximum size of aggregate)	Cubic meter
601(2)	C20 Concrete (specify maximum size of aggregate)	Cubic meter
601(3)	C25 Concrete (specify maximum size of aggregate)	Cubic meter

602 STEEL REINFORCEMENT FOR CONCRETE STRUCTURES

602.1 Description

This work shall consist of furnishing, fabricating and placing of reinforcement of the specified grade and type in concrete structures in accordance with these Specifications and in conformity with the details shown in the Drawings or as approved by the Engineer.

602.2 Materials

Steel reinforcement used shall meet the requirement of the followings:

a. Hot rolled MS bars to SLS 26
b. Cold worked high yield steel bars to SLS 375
c. Steel fabric to SLS 95
d. Hot-rolled and cold-worked steel bars shall comply with BS 4449 except that no bar shall contain a flash weld.
e. Hard-drawn mild steel wire shall comply with BS 4482.
f. Steel fabric reinforcement shall comply with BS 4483 and shall be delivered to Site in flat mats or pre-bent.
g. BRC mesh shall comply with BS 4483.

602.3 Construction Requirements

a. Protection and Storage

Reinforcement shall be clean and free from loose rust and mill scale, dirt, oil, grease and paint at the time of fixing in position and subsequent concreting. Reinforcement for structures shall be handled and stored in a manner that will prevent deformation.

b. Cutting and Bending

Bars shall be cut and bent cold by applying a slow, even pressure with equipment and methods approved by the Engineer to the dimensions given in the Bar Bending Schedules given in the relevant Drawings.

Bends and hooks shall conform to the requirements given in the Drawings or established by the Engineer. The bars shall be cut and bent within the tolerances given in BS EN ISO 3766. The Contractor shall be responsible for the correct fit of the bars and achieving required cover as given on the Drawings or established by the Engineer.

Any bar that has already been bent shall not be re-bent at the location of the original bend without the approval of the Engineer.

c. Placing and Fixing of Reinforcement

All reinforcement bars shall be placed in positions shown in Drawings and shall be firmly held in position, with the specified spacing, prior to concreting operations using necessary wire ties at bar intersections, spacer bars, steel chairs of approved type or by other approved means. Wire ties shall be black annealed M.S. or G.I. wire, not less than 1.0 mm in diameter and shall be firmly tied and folded so that they do not project into concrete cover region. The adequacy of supports and ties to secure the reinforcement properly shall be subject to the approval of the Engineer. Layers of bars shall be separated by spacer bars, pre-cast mortar blocks or other approved devices. All horizontal and vertical reinforcement shall be supported on motor blocks, of approved shape conforming to cover requirements, with tie wires embedded in them, made out of 1: 1 ½ or 1:2 Cement sand mix. Supports which are in contact with the external face of the concrete shall all be mortar blocks. The use of small stones or wooden blocks shall not be permitted. As far as possible, bars of full length shall be used. In case this is not possible splicing of bars shall be done as specified in the Drawings or as directed by the Engineer. (All splices shall have a lap length at least equal to the anchorage length required to develop the stress in the smaller of the bars to be lapped). Laps and joints shall be made only where shown on the Drawings or with the approval of the Engineer.

Where welding is specified or approved by the Engineer, as an alternative, the reinforcement shall be butt welded by the metal arc process using covered electrodes, complying with standard Specifications for such work. Where screwed joints are specified for reinforcement they shall be butt joints made by using screwed coupling boxes of approved types capable of developing strength at least 10% more than that of the bar which is to be jointed, and the joint as a whole shall be capable of developing the same strength as the coupling. Before the Engineer approves the welding of reinforcement or screwed joints of reinforcement, the Contractor shall submit such samples as the Engineer may require for testing.

Substitution with different size of bars or with different type of steel will be permitted only with the prior approval of the Engineer

No concreting shall commence until the reinforcement have been inspected and approved by the Engineer.

Reinforcement after being placed in position shall be maintained in a clean condition until completely embedded in concrete. Special care shall be exercised to prevent any displacement of reinforcement in concrete already placed. All bars protruding from concrete and to which bars are to be spliced and which are likely to be exposed for a considerably long period shall be protected by a thick coat of neat cement grout.

d. BRC mesh

BRC mesh shall be placed as shown in the Drawings and as accepted by the Engineer. Minimum 450 mm overlap shall be kept between two meshes unless otherwise specified. Cover to the mesh and binding of two meshes shall acceptance to the Specification Clause 602.3 c. and as specified in the Drawings or as instructed by the Engineer.

602.4 Tests and Standards of Acceptance

The materials shall be tested in accordance with these Specifications and shall meet the prescribed criteria. The work shall conform to these Specifications and shall meet the prescribed standards of acceptance.

602.5 Measurement and Payment

a. Measurement

The quantity of reinforcement shall be computed by weight in kilogram for each types of material used and accepted as shown in the Drawings, provided that the quantity shall not include the reinforcement in any item of work the basis of payment for which includes the reinforcement. Lengths shall include hooks at ends. Wastage over laps, coupling welded joints, spacer bars and annealed steel wire for binding shall not be measured and cost of these items shall be deemed to be included in the rate for reinforcement.

The quantity of BRC mesh shall be computed by square meters. Over laps, annealed steel wire for binding shall not be measured and cost of these items shall be deemed to be included in the rate for mesh.

b. Payment

This works measured as provided above, will be paid for at the unit rate per kilogram of reinforcement for each type and size of steel. The payment shall be full compensation for furnishing and placing of steel and for all labour, equipment, tools and incidentals necessary to complete the work prescribed in this section.

Quantities measured for BRC mesh as provided above, will be paid for at the unit rate per square meter. The payment shall be full compensation for furnishing and placing of steel and for all labour, equipment, tools and incidentals necessary to complete the work prescribed in this section.

The Pay Items and Pay Units will be as follows:

Pay Item	Description	Pay Unit
602(1)	Tor Steel reinforcement (specify the type, size and grade)	Kilogram
602(2)	BRC mesh (specify the opening size and diameters)	Square Meter

603 RANDOM RUBBLE MASONRY

603.1 Description

This work shall consist of construction, in Random Rubble Masonry (RRM), of walls, drains and other structures. Work shall be carried out in accordance with this Specification and with the lines and dimensions shown in the Drawings, or as directed by the Engineer.

603.2 Materials

Stones used in Random Rubble Masonry shall be obtained from approved quarries and be approved by the Engineer. They shall be hard, durable, fresh rock free from fractures, weather and other imperfections, and shall generally be of maximum dimension not exceeding 30 0mm.

Through stones shall be specially made approximately to square Cross-section, 150 x 150 mm minimum dimensions, and of minimum length 600 mm or the thickness of the wall whichever is less. They may be pre-cast concrete units, if so specified.

Cement used shall conform to requirements of Section 902 of the specification.

603.3 Construction Requirements

a. Random rubble masonry using cement mortar

All stones, chips and spalls used shall have clean surfaces to facilitate adherence of mortar to them and shall be wetted before laying. Every stone shall be set flush in cement mortar of 1:5 or any other approved mix proportions, and there shall be no dry work or hollow spaces left. Smaller stones shall be used to roughly fit the spaces between the larger stones, and chips and spalls shall be wedged in where necessary to prevent thick beds of mortar. The stones in each course shall overlay the joints in the preceding course as far as practicable.

A sufficient number of through stones shall be used in building walls. At least one through stone shall be built into walls at intervals of 2 m horizontally and 600 mm vertically. They shall run through the full thickness of the walls which are up to 600 mm in thickness. In case of walls exceeding 600 mm in nominal thickness, more than one through stone shall be used to run though the full thickness of the wall. In such cases the overlaps shall not be less than 150 mm.

Where the faces of walls are to be plastered, their mortar joints shall be raked to depths of 12 to 20 mm to form a key, and the plastering shall be done using cement mortar of specified proportions and to the specified thicknesses. The faces which are not to be plastered shall be provided with struck off mortar joints unless otherwise specified. In the latter case selected stones shall be used with straight edges as far as practicable, to provide close fitting mortar joints of uniform width not exceeding 20 mm. The brushings of the stones shall not project more than 25 mm from the plane of the joints. Where pointing of joints is specified it shall be carried out as given in the Drawings or as directed.

Vertical construction joints in walls shall be avoided and at horizontal or sloping construction joints, the mortar in the last course at the joint shall be omitted, for at least half the nominal thickness, to be later placed with the succeeding course of masonry.

When placing rubble masonry on or against construction joints, all laitance shall be removed from exposed hardened mortar surfaces; and feather edges and hardened mortar shall be removed from exposed stone surfaces.

When rubble masonry is placed against a fill or excavation, surface irregularities in such surfaces shall be filled with stone chips, spalls or other free draining materials. Drains and formed weep holes shall be constructed as shown in the Drawings or as directed by the Engineer.

All rubble masonry work shall be maintained in constantly wet condition for a period of at least 3 days commencing from the time of final setting of the cement.

b. Dry Random Rubble Masonry

Larger stones shall be set in such a manner that they are interlocked with adjacent stones and spalls, and chips shall be wedged into the resulting hollow spaces using a hammer where necessary. Brushings of the stones shall not project more than 25mm from the face of the walls. The stones in each course shall overlay the joints in the preceding course as far as practicable. The faces of the wall shall be constructed with stones having straight edges to provide close fitting edges. Through stones where specified shall be used as indicated in subsection 603.3 a.

603.4 Tests and Standards of Acceptance

The materials shall be tested in accordance with these Specifications and shall meet the prescribed criteria. The work shall conform to theses Specifications and shall meet the prescribed standards of acceptance.

603.5 Measurement and Payment

a. Measurement

Dry RR masonry shall be measured in Cu.m of completed and accepted work.

RRM using cement mortar and Dry RR masonry shall be measured separately in Cu.m of completed and accepted work.

Work of plastering shall be measured in Sq.m of completed and accepted work. No separate measurement for pointing work.

b. Payment

The unit rate of payment for each item of work shall be full compensation for all materials, labour, tools and incidentals necessary to complete the work. No separate payment will be made for necessary trimming of local voids in the excavated or filled surface against which rubble masonry is placed.

The Pay Items and Pay Units shall be as follows;

Pay Item	Description	Pay Unit
603(1)	RR Masonry using cement mortar	Cubic meter
603(2)	Dry RR Masonry	Cubic meter
603(3)	Plastering	Square meter

604 PLUM CONCRETE

604.1 Description

This work shall consist of construction, in Plum Concrete, of walls, drains and other structures. Work shall be carried out in accordance with this Specification and with the lines and dimensions shown in the Drawings, or as directed by the Engineer.

604.2 Materials

Concrete used shall conform to requirements of Section 601 of the specification.

Stones used in Plum Concrete shall be obtained from approved quarries, and be approved by the Engineer. They shall be hard, durable, fresh rock free from fractures and other imperfections.

604.3 Construction Requirement

The proportion of plums should not exceed 40 per cent of total volume of concrete. The stone size should be used for plum as per the Drawings or as directed by the Engineer. The length of stone shall not exceed 3 time its height. It will be sufficient to make up the total volume with plums and fill all the interstices, which should not be less than 150 mm, with Concrete of grade specified in the Drawings or as Specified by the Engineer. The water cement ratio shall be adjusted at site to maintain the flow-ability of concrete to fill all the interstices properly. The plums are laid in layers using the cement concrete as mortar. The plum shall be raised uniformly, and no part, at any time shall be raised more than 900 mm above adjoining work. Double scaffolding shall be provided for construction and piercing of walls for scaffolding shall not be permitted. The Contactor shall be responsible for any damage or injury resulting from poor scaffolding. All plum concrete shall be cured for at least 7 days.

604.4 Measurement and Payment

a. Measurement

Plum Concrete shall be measured separately in Cu.m of completed and accepted work.

b. Payment

The unit rate of payment for each item of work shall be full compensation for all materials, labour, tools and incidentals necessary to complete the work.

No separate payment will be made for necessary trimming of local voids in the excavated or filled surface against which plum concrete is placed.

The Pay Items and Pay Units shall be as follows;

Pay Item	Description	Pay Unit
604(1)	Plum concrete C15/40	Cubic meter

605 FORMWORK FOR STRUCTURES

605.1 Description

This work shall consist of providing all temporary or permanent forms and molds required casting concrete, together with all temporary construction required for their support which include props, staging, centering, scaffolding and temporary construction including piles where necessary.

This work shall be carried out in accordance with these Specifications and with the shape, dimensions and surface finish as shown on the Drawings or as directed by the Engineer.

605.2 Materials

All formwork shall be of timber, metal or any other material approved by the Engineer

Timber for forms shall generally be of approved quality, well-seasoned and of uniform thickness, sound, free from warps, loose knots. whist, wavy edges, saps and shakes or other defects affecting the strength of formwork and appearance of the finished structure, where so required the surface of the timber shall be suitably dressed.

Metal sheets for forms shall be free from rust and dents with no surface blemishes that will impair the concrete surface finished

Supports and scaffolding shall be of metal, sawn timber, round timber or of any other material approved by the Engineer.

605.3 Construction Requirements

a. False work

Temporary staging shall be provided by the Contractor to enable the constructional operations to be performed in the required sequences and in a safe manner.

The false work shall be properly designed and constructed, to provide the necessary rigidity and to carry the loads which it will be required to support. Where necessary, it shall also include safe walkways to enable the Engineer to inspect the formwork, reinforcement and concreting. Complete details of the arrangements proposed shall be submitted to the Engineer for his approval.

b. Construction of formwork

All formwork shall be so constructed that there shall be no loss of material from the fresh concrete. Forms shall be mortar tight and shall be made sufficiently rigid by the use if ties and bracing to prevent any displacement or sagging and shall be capable of withstanding all incidentals loading during concreting. Formwork shall be such that hardened concrete shall be in the position and of the shape, dimensions and surface finish described in the Contract.

Where internal ties are permitted they or their removable parts shall be extracted without damage to the concrete to a depth of at least 25 mm from the finished concrete surface and resulting holes filled with mortar. No permanently embedded metal nuts shall have less than 25 mm cover from the finished concrete surface.

Formwork shall be constructed so that the side shutters of members can be removed without disturbing the soffit shutters, and if the Contractor wishes to leave some of the props in place when the soffit shutters are removed. These props shall not be disturbed during the striking. When specified the detailed arrangements of the props shall be submitted in advance to the Engineer, for his prior approval.

c. Formed surface and finish

Surface shall be finished smooth or rough as specified. Normally, exposed surfaces shall be finished smooth. Where smooth finish is required, the forms shall be made of dressed timber with or without form liner approved by the Engineer or shall be of metal. Where metal forms are used, all bolts and reverts shall be counter sunk necessary and well ground to provide a smooth, plane surface. For surfaces that are not designated to be finished smooth sawn timber without dressing (rough timber) may be used.

d. Re-use of formwork

Where formwork has to be re-used the shape, strength, rigidity water tightness and surface smoothness of the reused forms shall be maintained at all times. Any warped or bulged timber shall be resized before being used. Formwork which is unsatisfactory in any respect shall not be re-used.

e. Preparation of formwork before concreting

Immediately before concreting, the forms shall be thoroughly cleaned either by water jetting or by any other suitable method, temporary openings being provided for the purpose. The inside surfaces of the forms shall then, if necessary, be coated with approved materials such as mold oil to prevent adhesion of the concrete. This material shall not come into contact with the reinforcement.

f. Inspection by Engineer prior to placing concrete

No concrete shall be placed until the Engineer has inspected and approved the formwork, false work and reinforcement.

g. Removal of formwork

The Engineer shall be informed in advance as to when the Contractor intends to strike any formwork. The minimum period between concreting and the removal of forms shall be as follows:

Sides of beams, walls, columns	-	01 day
Soffit of secondary slabs (Props left in)	-	04 days
Soffit of culvert slabs	-	10 days

Soffit of beams (Props left in) - 10 days

The periods in the above table are given as a guide and based on average weather conditions and the Ordinary Portland Cement. They shall be increased in areas of extremely cold weather unless otherwise directed by the Engineer, and may be changed, if other types of cement or additives are used, subject to the Engineer's approval.

605.4 Measurement and Payment

a. Measurement

Where it is stipulated in the Contract that formwork will be paid for separately, measurement for formwork shall be taken in sq.m of the area of concrete for each type of finished surface in smooth or rough finish.

Where it is not specifically stated in the description of the items that formwork will be paid for separately, the rate for reinforced cement concrete items shall be deemed to include the cost of all formwork.

b. Payment

The rate for formwork, where this is provided as a separate item, shall include the cost of all materials, labour, tools and plant hire required for construction and removal of forms as described above and also for framing required for properly supporting the members for at least the periods specified under 605.3 g. unless otherwise specified.

The pay items and pay units will be as follows:

Pay Item	Description	Pay Unit
605(1)	Formwork smooth finish	Square meter
605(2)	Formwork rough finish	Square meter

606 HOT DIPPED GALVANIZED MILD STEEL/TOR STEEL DOWELS

606.1 Description

The work shall consist of providing hot dipped galvanized mild steel/tor steel dowels supplied, fixed and grouted at fixed ends as per these Specifications and Drawings or as instructed by the Engineer.

606.2 Material

The dowels shall be of mild steel having mechanical and physical properties specified in section 602 .

The grouting shall be of Ordinary Portland Cement and shall confirm to Sub-section 902.1 .

Hardened grout shall have a compressive strength of not less than 30 M Pa at 28 days.

606.3 Construction Requirements

The fixing of dowels shall be done as shown in the Drawings. The dowels shall be inserted into the holes to the depth specified in the drawing and grouted well. Diameter of the drill holes shall be 1.25 – 1.50 times the dowel diameter unless otherwise specified.

Hot-dip galvanize for dowels in conformance with requirements of AS 1214 (Hot-dip galvanized coatings on threaded fasteners) or EN ISO 10684 and AS 4680 (Hot-dip galvanized (zinc) coatings on fabricated ferrous articles) or EN ISO 1461 with minimum average coat thickness of 85 µm or 600 g per square meter.

606.4 Tests and Standards of Acceptance

The materials shall be tested in accordance with these Specifications and shall meet the prescribed standards of acceptance.

606.5 Measurement and Payment

a. Measurement

The dowels will be measured for payment by the linear meter length provided in the finished work and as accepted by the Engineer. The length will be calculated as marked on the Drawings.

b. Payment

This work measured as provided above will be paid for at the Contract unit price for this item. Such price and payment constitute full compensation for all material, galvanizing, drilling, grouting, labour (inclusive of drilling), tools and equipment, scaffolding work, platforms and incidentals, needed to complete all works. The complete work includes work associated in the Drawings, Bills of Quantities or elsewhere in the specifications.

The pay item and Pay unit shall be as follows.

Pay Item	Description	Pay Unit
606(1)	Supply and installed (specify dia.) hot dipped galvanized Mild steel/Tor steel dowels	Linear meter

700 SOIL NAILING AND HORIZONTAL DRAINS

701 SOIL NAILING

701.1 Description

This work shall consist of soil nailing, construction of nail heads, laying of protective net, hydro seeding/planting and other associate works. The work shall be carried out in accordance with this Specification and in conformity with the Drawings or as directed by the Engineer.

Unless otherwise approved by Engineer, the Contractor performing the soil nailing works described in this Specification shall have experience in soil nailing of a minimum of 5 years. The Contractor's on-site supervisors shall have a minimum of 3 years' experience in installing soil nails with Contractor's organization.

Full-time supervision by a qualified Engineer or Technician shall be accorded to all soil nailing works especially all the inspection checks and quality control tests.

701.2 Materials

The materials used for soil nailing shall meet the requirements of the following, unless otherwise specified.

a. Reinforcement for Soil Nailing

Soil Nail (Re-bar)

Unless otherwise shown on Drawings, reinforcement bars (re-bars) for soil nails shall be deformed Y25 or Y32 bars (SLS-375 – Ribbed Steel Bars for the Reinforcement of Concrete with minimum yield strength of 460 MPa), threaded and fully hot-dip galvanized in conformance with requirements of AS 1214 (Hot-dip galvanized coatings on threaded fasteners) or EN ISO 10684 and AS 4680 (Hot-dip galvanized (zinc) coatings on fabricated ferrous articles) or EN ISO 1461 with minimum average coat thickness of 85 µm or 600 g per square meter.

Thread

The nail bars or re-bars shall be threaded at the exposed end (nail head) for 300 mm length of nail to facilitate fixing of galvanized washer, overlap locking washers, nuts, MS bearing plates at the exposed end. Cut thread properties around steel bars shall be as per ISO metric coarse pitch threads pursuant to EN ISO 898-1. Proper machinery shall be used to cut threads around rebar to the precise dimensions such as the pitch and the diameter to the satisfaction of the Engineer.

If applicable, the nail bar shall be extended using coupler: coupling end shall be threaded for a length shown in the drawings or as instructed by the Engineer and fixed of galvanized coupler at the end of the nail bar. The criteria for coupling threads shall be as specified for the nail head threads above. Minimum threaded diameter shall not be less than 3mm from the soil nail bar diameter.

Nut

Minimum length of nuts shall be 55 mm and 45 mm for nail bar diameters 32 mm and 25 mm respectively. The tightening nuts shall be of minimum strength grade 8 of BS 4190 or EN ISO 898-2 and tested according to the respective standards. The nut shall be tested to ensure it meets the proof load of at least the load corresponding to the tensile strength of the rebar or 150 kN whichever is maximum without failure to BS 4190 or EN ISO 898-2 accordingly.

Coupler

Only soil nails of more than 12 m long shall have re-bars spliced or coupled. The bar coupler shall be capable of developing at least 95% of the load corresponding to the tensile strength of the re-bar, tested pursuant to ISO 15835-2, ISO 15835-1 accordingly, and certified by the manufacturer. Test certificates from a reputable or accredited laboratory, approved by the Engineer, to show compliance with the specification shall be submitted to the Engineer for verification and approval before commencement of works.

The threaded length of coupler shall not be less than 2 times of diameter of soil nail at each end. An additional 5 mm unthreaded length shall be kept at the middle of the coupler in between the threaded portions. Threaded nail shall be fitted at least over a length of two times of diameter of soil nail reinforcement into each reinforce bar at the splice. Threaded part of nail shall not remain outside of the coupler after tightening. All requirements stated herein has been illustrated in the detailed drawing of the coupler.

Corrosion Protection

All steel components for soil nails including re-bar, re-bar thread, nuts, couplers, etc., shall be hot-dip galvanized in conformance with requirements of AS 1214 or EN ISO 10684 (Hot-dip galvanized coatings on threaded fasteners) and MS bearing plates, washers shall be hot-dip galvanized in conformance with requirements of AS 4680 or EN ISO 1461 (Hot-dip galvanized (zinc) coatings on fabricated ferrous articles) with minimum average coat thickness of 85 µm or 600 g per square meter.

Where the thick protective coating is interfering the coupler/ nut assembly, the coupler/ nut thread shall be over-tapped pursuant to the tolerances in AS 1214 or EN ISO 10684 accordingly. Where over tapping is carried out, the next higher grade of coupler/ nut to that specified shall be used.

b. Grout Tube

Grout tubes shall have a minimum internal diameter of 12 mm for the core and outer annulus grouting and shall be made from high-density polyethylene with a wall thickness of at least 2.0 mm or its equivalent to AS 4131. Tubing shall be of adequate strength to resist damage during both installation and grouting.

Grout tubes shall extend to the lowest portion of the drilled hole to ensure thorough grout penetration and shall be securely fixed to the steel reinforcement to prevent displacement or dislodging.

c. Cement Grout

Cement used for grouting shall conform to requirements of Sub-section 902.1 of the Specification and shall be Ordinary Portland Cement (OPC) complying with (BS EN 196 or BS EN 197). Only fresh cement, free of lumps and less than three months old shall be used. Adequate stocks of cement shall be stored at the mixers to ensure continuous and uninterrupted grouting operations.

Grout shall consist of cement, water and approved grout fluidifier pursuant to ASTM C937. Water cement ratio shall be 0.40 to 0.45, and unless otherwise stated in the design drawing, minimum cube strength of 7 day strength and 28 day strength shall be 20 MPa and 30 MPa respectively (BS 1881/ASTM C942). Sand shall not be used for drill holes of less than 200 mm diameter unless otherwise approved by the Engineer in writing.

Water used in grout shall be clean and free from oil, acid, alkali, organic or vegetable matter and from any ingredients harmful to steel or cement grout. Water shall not contain more than 500 mg/l of chloride ions.

Additives or admixtures shall not be used without the approval of the Engineer. Suitable additives or admixtures shall be used to improve flow-ability and to control bleeding or shrinkage problems. Admixtures shall comply with the requirements of AS 1478/ ASTM C494 and shall not be deleterious to the properties of the grout or any other soil nail components. Admixtures containing calcium chloride, methocell, ligno-sulphonate and aluminates shall not be used. Expansive admixtures where used shall be of the pre-hardening type and not include iron or aluminium powders. Any chemical reactions between grout constituents or materials in contact with the grout shall not produce gases.

Grout shall be thoroughly mixed by a suitable high-speed colloidal mixer (> 100 rpm) until a homogeneous grout, free from un-dispersed cement and lumps and bleeding is obtained. The grout, after mixing for a few minutes, shall be transferred through a 1.2 mm wire cloth/sieve into a storage tank attached with a paddle agitator to prevent sedimentation, to remove lumps. Final mixture of this grout shall be high bleed resistance, low shrinkage, and high fluidity and shall conform to the performance requirements outlined in Table 701-1 below.

Table 701-1: Performance requirements for Cement Grout

Property	Test Method	Criteria	Detail
Bleeding	ASTM C940	Final bleeding < 0.5%	Measured when two successive readings show no further expansion or bleeding
Volume change	ASTM C1090	Maximum height change @ 1 day & 28 days 0.1% and 0.3%	
Early expansion	ASTM C940	< 2% at 3 hours	Temperature tolerances are 20 °C ± 5 °C

Fluidity	ASTM C939	Immediately after mixing: Efflux time < 20 s 45 minutes after mixing: Change in efflux time < ± 3 s	Target efflux time for the site conditions shall not vary from nominated value by more than ± 2s.

The total sulphate (SO_3), chloride and nitrate contents of the grout shall not exceed 4%, 0.1% and 0.1% respectively, expressed as a percentage between the respective ion content and the cement content by mass in the grout. The total sulphate (SO_3) and chloride contents shall be determined by the method described in AS 1012.20. The total nitrate content shall be determined by the method described in ASTM D 4327-03.

Submit the grout mix proportions and types of additive or admixture (if used) together with test results at least 14 days for the Engineer's approval prior to the commencement of grouting work at site. Unless otherwise requested by the Engineer, cube tests shall be made at the rate of 1 set of cubes with other tests specified as per Section 802 : Table 802-1. The times of day at which samples are taken shall be chosen at random. At least one sample shall be taken on each day.

d. Centralisers

Centralisers shall be manufactured from materials that have no deleterious effects to the reinforcing system and shall not corrode. The centralisers shall be of a shape that permits the free flow of grout but still performs the centralising function acceptable to the Engineer. Centralisers shall not be highly compressible, brittle, bulky or cause decoupling of the grout or de-bonding of the grout/steel-reinforcement interface to the satisfaction of the Engineer.

Plastic slip-on centralisers shall not use, or rely on the grout tube spirally wound around the soil nail to act as centraliser. Centralisers shall be firmly fixed to the nails.

Centralisers shall be provided at intervals not exceeding 1 m along the soil nailing bar, with the first and last centraliser fixed 0.3 m from each end of nail to ensure that the rebar is centered within the drill hole. Centralisers shall be sized to position the rebar within 5 mm of the centre axis of the drill holes and to allow tremie pipe (about 12 mm diameter) insertion to the bottom of the drill hole. The centralizers shall have to be produced by a reputable manufacturer with PP (Polypro Pylene) or PVC (Poly Vinyl Chloride).

Suitability of the method of assembly and fixing of the centralisers, grout pipes, etc., shall be determined by carrying out trials at site at the presence of Engineer until no damages and no distortion of centralisers and grout pipes are observed during inserting and withdrawing of the soil nails. In addition, pull-out checks as specified in Sub section 701.6 a. shall also be carried out during the installation of working soil nails.

e. Tor steel

Unless otherwise shown on Drawings, reinforcement bars (re-bars) for nailing, pillows, beams, and other structures shall be as per Section 602 .

f. Cement

Cement used shall conform to requirements of Section 902 of the Specifications and to the provisions of the following British Standards or the corresponding Sri Lanka Standard:

BS EN 197-1 Ordinary Portland Cement (ordinary and rapid hardening)

BS EN 197-1 Portland – Blast furnace cement

The Contractor shall provide suitable means of storing and protecting the cement against dampness. Fully covered storage areas with floors protected from rising dampness shall be provided. Bagged or bulk cement which has become partially set or which contains lumps of caked cement shall be rejected. The use of cement reclaimed from discarded or used bags will not be permitted.

g. Coated Metallic Mesh

The Contractor shall get prior approval for the method for fixing of metallic mesh. The Contractor shall obtain approval from the Engineer for the manufacturer specification including technical data sheet of Coated Metallic Mesh acceptable to the Engineer, prior to supplying the material. In addition, the Contractor shall submit Material Test Certificate (MTC) acceptable to the Engineer during the supply of material.

Test requested by the Engineer for selected samples shall be carried out by the Contractor, on his own cost, to ensure quality of the material as per Section 802 : Table 802-1. Coated Metallic Mesh shall conform to the property requirements set out in Table 701-2 and Table 701-3 accordingly

Table 701-2: Coated Metallic Mesh properties for Embedded Grid Beam Method

	Property	Requirements	Reference
1	Mesh shape	Rhomboid	
2	Tensile strength of mesh (main direction)	50 kN/m (min)	To EAD 230025-00-0106
3	Tensile strength of mesh (secondary direction)	25 kN/m (min)	To EAD 230025-00-0106
4	Tensile strength of wire	800 MPa (min)	To EN 10218-1
5	Diameter of steel wire	2 mm (min)	To EN 10218-2
6	Mesh width (opening size)	45 - 80 mm	Diameter of the inscribed circle
7	Corrosion protection	HD Galvanized/ Galvanized or Zinc aluminum alloy coated to (Class A) (Zn95Al5)	To EN 10244-2
8	Coating mass	210 g/m^2 (min)	To EN 10244-2
9	Sewing wire Diameter	4 mm (min)	To EN 10218-2
10	Sewing wire coating mass	275 g/m^2 (min)	To EN 10244-2

Table 701-3: Coated Metallic Mesh properties for Isolated Nail Head/ Bearing Plate Method

	Property	Requirements	Reference
1	Mesh shape	Rhomboid	
2	Tensile strength of mesh (main direction)	100 kN/m (min)	To EAD 230025-00-0106
3	Tensile strength of mesh (secondary direction)	45 kN/m (min)	To EAD 230025-00-0106
4	Tensile strength of wire	800 MPa (min)	To EN 10218-1
5	Diameter of steel wire	3 mm (min)	To EN 10218-2
6	Mesh width (opening size)	60 - 80 mm	Diameter of the inscribed circle
7	Bearing resistance against puncturing	Min 100 kN	To EAD 230025-00-0106
8	Corrosion protection	HD Galvanized/ Galvanized or Zinc aluminum alloy coated to (Class A) (Zn95Al5)	To EN 10244-2
9	Coating mass	250 g/m^2 (min)	To EN 10244-2
10	Sewing wire Diameter	6 mm (min)	To EN 10218-2
11	Sewing wire coating mass	290 g/m^2 (min)	To EN 10244-2

Table 701-4: Coated Metallic Mesh properties for Non-Embedded Grid Beams

	Property	Requirements	Reference
1	Mesh construction	Interlocking of steel wire which provide approximately square meshes	BS EN 10223-6 (Steel wire chain link fencing)
2	Tensile strength of wire	350 MPa (min)	To EN 10218-1
3	Diameter of steel core wire	2.8 mm (min)	To EN 10218-2
4	Mesh width (opening size)	45 - 55 mm	Distance measured at right angles internally between adjacent parallel wires
5	Corrosion protection	HD Galvanized/ Galvanized or Zinc aluminum alloy coated to (Class A) (Zn95Al5)	To EN 10244-2
6	Coating mass	250 g/m^2 (min)	To EN 10244-2

h. Connection Clips

HD Galvanized/ Galvanized or Zinc aluminum alloy coated to (Class A) EN 10244-2 connection clips of minimum diameter ≥ mesh wire diameter shall be used to connect two wire mesh sheets unless otherwise approved by the Engineer. The mesh connection shall be tested to EAD 230025-00-0106 to ensure tensile strength of mesh in both main and secondary directions is achieved through the proposed clip arrangement.

Test requested by the Engineer for selected samples shall be carried out by the Contractor, on his own cost, to ensure the quality of the material.

i. Sewing wire

Sewing wire of Diameter as specified in Section 701.2 g. shall be used.

Sewing wire shall be used to connect two wire mesh sheets unless otherwise approved by the Engineer. The mesh connection shall be tested to EAD 230025-00-0106 to ensure tensile strength of mesh in both main and secondary directions is achieved through the proposed sewing arrangement.

j. Wire rope grips, Clamps or U-bolts

The wire rope grips (U-bolts) shall always be put on over the end of the rope that is not subject to stress, the dead end of the ropes shall be left unclamped as shown in the drawings. Clamps shall conform to EN 13411-5. The screw bolt material shall be property class 6.8 in accordance with BS EN ISO 898-1. Testing in accordance with EN ISO 898-1.

k. Shotcrete

Material used for the shotcrete mix shall be as specified in the "ACI 506R-05 – Guide to Shotcrete" and as acceptable to the Engineer unless otherwise specified

Aggregate for shotcrete shall comply with the requirements of ASTM C33. The combined aggregate shall meet the gradations given in Table 701-5. Aggregate failing to meet the limits in Table 701-5 may be used if preconstruction testing proves satisfactory results as acceptable to the Engineer.

Table 701-5: Grading limits for combined aggregates

Sieve Size Confirming to ASTM	Percent by weight passing individual sieve	
	Fine aggregate	Course aggregate
3/4 in.	-	-
1/2 in.	-	100
3/8 in.	100	90 to 100
No. 4	95 to 100	70 to 85
No. 8	80 to 98	50 to 70
No. 16	50 to 85	35 to 55
No. 30	25 to 60	20 to 35
No. 50	10 to 30	8 to 20
No. 100	2 to 10	

The shotcrete shall have a minimum cement content of 380 kg/m^3 as discharged from the nozzle. Special additives or combination of additives as required for the process may be used subject to their approval by the Engineer.

Cement used shall conform to requirements of Section 902 of the Specifications and to the provisions of the following British Standards or the corresponding Sri Lanka Standard:

BS EN 197-1 Ordinary Portland Cement (ordinary and rapid hardening)

BS EN 197-1 Portland – Blast furnace cement

The Contractor shall provide suitable means of storing and protecting the cement against dampness. Fully covered storage areas with floors protected from rising dampness shall be provided. Bagged or bulk cement which has become partially set or which contains lumps of caked cement shall be rejected. The use of cement reclaimed from discarded or used bags will not be permitted.

l. Nail Heads and Bearing Plates (outer)

Where shown on the Drawings, nail heads and bearing plates shall conform to the following:

(i) Nail head and bearing plate components (including nuts, washers, etc.) shall be fabricated from Grade S355J according to EN 10025-2.

(ii) All nail head components and the bearing plates shall be hot-dip galvanized to AS 4680 or EN ISO 1461, or galvanized by an alternative process approved by the Engineer, with a minimum coating thickness of 85 microns.

(iii) The holes in MS bearing plate shall be drilled perpendicular to the face of MS plate and the center of the hole shall be at a position of within 2 mm from the center of the MS plate. The total annular clearance between the galvanized rebar diameter and the plate-hole diameter shall not exceed 1 mm.

Where indicated, provide the bearing plate with holes for the secondary grout injection and the return flow which ensure that no void exists between the primary grout surface and the bearing plate.

m. Boundary Rope

Boundary Rope shall conform to the property requirements set out in Table 701-6 unless otherwise specified in the Drawings. Tests requested by the Engineer for selected samples shall be carried out by the Contractor, on his own cost, to ensure the quality of the material. Wires/ropes shall be in accordance with EN 12385-4.

Table 701-6: Boundary Rope Properties

	Property	Requirements
1	Construction	WSC
2	Tensile strength grade	1750 N/mm^2 (min)
3	Corrosion protection	HD Galvanized/ Galvanized or Zinc aluminum alloy coated to (Class A) EN 10244-2

n. Coir Mesh

Coir net shall be meshed fabric of strand made of coir fiber. The required mesh size shall approximately 15 x12 mm and the required diameter of the strand shall approximately 4 ~ 7 mm. The requirement of coir net as follows:

Table 701-7: Coir Mesh Properties

Base Material	*Tensile Strength (kN/m)	Unit Weight(g/m^2)	Strand Thickness(mm)	Eye Size(mm)
Machine Spun Coir fiber with inner cotton thread	6~30	300~1500	4~7	15x12

**Tensile Strength: Strength of the 1 m long wire*

Test requested by the Engineer for selected samples shall be carried out by the Contractor, on his own cost, to ensure quality of the material.

o. Dowels

The dowels shall be of mild steel as specified in Sub section 606 and shall be fully hot-dip galvanized in conformance with AS 4680 or BS EN ISO 1461 to minimum average coating thickness of 85 micro-meters or 600 g per meter square surface.

701.3 Materials Handling and Storage

Cement shall be stored properly to prevent moisture degradation and partial hydration. Cement that has been caked and lumpy shall be rejected and discarded.

Contractor shall suitably protect steel reinforcement, UPVC pipes, nail head components and bearing plates against mechanical damage, weld splash, contamination by marine spray and gross industrial atmospheric contamination. Store steel reinforcement and UPVC pipes in straight lengths. All soil nail components shall be stored in clean and dry conditions.

Galvanized steel reinforcement shall be carefully handled to avoid punctures, fractures or wear of the galvanizing. Dragging bare or galvanized steel reinforcement across abrasive surfaces or through deleterious materials such as surface soil shall be avoided.

Damage to the re-bar as a result of abrasion, cuts, nicks, welds and weld splatter shall be causes for rejection. Re-bars shall be clean from dirt, rust and other deleterious substances prior to installation. Heavy corrosion or pitting of re-bars shall be cause for rejection. Threaded end of re-bars to which bearing plate and nuts will be attached, shall be protected by some protective wrap during handling, installation, grouting and guniting.

701.4 Method Statement

a. General

The Contractor shall submit Construction Program and Method Statement at least 21 days before the commencement of the soil nailing works. Contractor shall not start the soil nailing work without an approved Construction Program and Method Statement.

The Method Statement and Construction Program shall include, but not be limited to, the following information:

(i) Names and resumes of suitably experienced personnel who shall supervise and carry out the work.
(ii) Method of installation of the soil nails, including drilling with or without working platform, cleaning, supporting the drill holes; and grouting and testing of the nails together with construction/excavation sequence. Only pneumatic, rotary and rotary percussion drilling with air as fluid and flushing agent shall be permitted.
(iii) Method for installing instrumented soil nails with strain gauges if any, providing conduits for wires and avoiding damage to wires between soil nails and readout box.
(iv) Proposed grout mix proportions and the method of grout production.
(v) Results of the trial grouting mix for anchor bars and soil nails that verify your proposed grout mix proportions and the method of grout production.
(vi) Detailed method of facing construction such as applying shotcrete, grid beam or pillow.
(vii) Detailed method of fixing the coated metallic mesh and bearing plates with or without working platform.
(viii) Coir mesh material laying process and Detailed method of vegetation

(ix) Proposed construction program and construction sequence.

b. Trial or Preliminary Soil Nail (Test Nail)

The Contractor shall be fully responsible of providing all necessary and suitable resources and materials to complete all the trial soil nails strictly according to this Specification. The Contractor shall install the trial or preliminary soils nails (test nails) and carry out the verification pull-out test (Sub section 701.6 a.) at locations selected by the Engineer before commencement of installation of working soil nails. Number of pull-out tests shall be 2 % of the total number of working soil nails subject to a minimum of two.

c. Construction Sequence

Installation of permanent nails shall be commenced once testing of the Test Nails (refer to Section 701.6 a.) has been completed. Unless otherwise shown on the Drawings or directed by the Engineer, soil nail slopes shall be constructed in an incremental, "top-down" manner in accordance with the following sequence;

(a) For each construction stage, excavate the face of the cut over the width and depth/height as approved in the Method Statement.

Unless the context requires otherwise, excavation of each "lift" shall not exceed a total depth of 2 m, and ~~also~~ shall not be continued more than 0.5 m below the row of soil nails to be installed, or the full depth of excavation in the case of the lowest row of soil nails.

The exposed slope face after each excavation "lift" shall be inspected by a Geotechnical Engineer attached to the Engineer before the installation of the soil nail structure.

(b) Installation and testing of soil nails together with installation of horizontal drains shall commence immediately after excavation is completed. The time the exposed excavated face is left unsupported shall be kept to a minimum to prevent any deterioration of the excavated face.

(c) Construction of the facing i.e. shotcrete or grid-beam or pillow over the exposed face at the current construction stage (lift) may commence once the soil nails and drainage have been installed. Make allowance for supporting the facing during placement of concrete/ shotcrete and for lapping of facing reinforcement to ensure a continuously reinforced face.

(d) Construction of subsequent rows of soil nails and concrete facing shall be carried out in a similar manner, one row at a time.

(e) Excavation for subsequent rows of soil nails shall not commence until the nail/anchor installation of the preceding row is fully completed and time has elapsed for the facing to gain sufficient strength to self-support to permit further excavation to proceed. Excavation of subsequent lifts shall only take place when the completed facing of the previous lift has achieved sufficient strength to be self-supporting. This time period shall not be less than 72 hours, unless otherwise approved by the Engineer.

Construction sequence specified in the Contract Documents without the approval of the Engineer.

701.5 Construction Requirement

a. General

Installation of the soil nails shall be carried out by qualified and experienced personnel. Soil nail shall be assembled in a workshop, or on site under shelter, by trained personnel. Identify the assembled soil nails using clear markings and handle them with care.

b. Set Out and Drilling

Rotary or rotary-percussion drilling equipment shall be used for drilling to ensure minimal re-molding of in-situ materials within the drill holes. Drilling fluids other than air shall not be used, unless otherwise approved by the Engineer.

Holes for galvanized soil nails shall be minimum 100 mm in diameter or as shown on the Drawings.

During the drilling operation, the ground conditions encountered on a drill hole log together with all changes in ground type and notes on water levels encountered and drilling rates shall be recorded. Records shall also be kept on the bearing and inclination of the formed drill hole as well as geometric details and the cleaning procedure in the drill hole log.

On completion of drilling, the drill hole shall be cleaned of all loose and deleterious material and protect or seal the drill hole opening to prevent the entry of foreign matter. Cleaning shall be carried out by flushing with air or compressed air using side jet bits, so as to ensure removal of all drill cuttings from the walls and bottom of the drill hole while avoiding excessive air pressure. Reinforcement shall only be installed in a clean hole free of debris and foreign matter.

Unless otherwise approved by the Engineer, no drilling shall be carried out at a place within 10 m radius of any freshly grouted soil nails including soil nails for pull-out tests, within 12 hours of the completion of grouting.

The drill holes for the soil nails shall have adequate clearance from the nearby structures and shall be constructed within the following tolerances:

(a) Deviation in alignment of the drill hole shall not exceed 2°. Deviation from straightness shall not exceed 20 mm in any 3.0 m length of hole. Entry point of the drill holes shall be within ±50 mm of its design position on the cut face.

(b) The depth of the holes as shown in drawings shall be within a tolerance of – 0, +100 mm.

(c) An allowance for over drilling (600 mm maximum) should be added to the depth where debris cannot be removed from the bottom of the hole.

(d) The maximum deviation of the diameter of the drill holes from the design diameter is –0, +10 mm.

c. Insertion and Grouting

i. Insertion of Soil Nails

Prior to soil nail installation, the drill hole shall be cleaned of debris by air flushing methods as stated above.

Insert soil nails in one careful operation at a controlled rate to avoid dislodgment of material from the wall of the drill hole and to ensure that centralizers and spacers are not displaced. If any damaged soil nail or soil nails with damaged galvanized coating during installation, shall be replaced. Insertion and grouting shall occur as soon as practicable following drilling, but in any event shall be completed within 12 hours after completion of drilling.

After inserting about 75 % of the total design length into the drill hole; the rebar shall be withdrawn to check the conditions of the centralizers and contamination of rebar. Such pull-out check shall be carried out on at least 1 % of the nails especially for those drill holes that have been left for more than 2 hours after completion of drilling.

Grouting shall not be carried out without prior approval of the Engineer.

ii. Grouting Equipment

Grouting equipment for soil nail installation shall be of a type, quantity and size which is suitable for the grouting required and is approved by the Engineer. Equipment shall be always kept clean and in good working order.

The equipment shall include:

(a) A purpose designed high speed mechanical stirrer capable of producing grout free of lumps within a mixing time of 2 minutes. Mixers shall be fitted with a water volume measuring device for batching purposes

(b) A holding tank fitted with an agitator to provide continuous agitation of the grout at > 100 rpm. The tank shall be fitted with a dipstick to allow continuous measurement of the volume of grout in the tank;

(c) Flow meter and pressure gauge to check the intake grout volume and the required pressure.

The pump used for grout injection shall be of the positive displacement type (i.e. it shall be actuated by a piston or screw) fitted with a bypass back to the agitator tank to allow a standby pump to be brought into operation immediately in the event of breakdowns during grouting operations.

iii. Grout Mixing

Batching of the dry materials shall be by weight. Measure the amount of water used with a calibrated flow meter or a measuring tank.

Grout shall be mixed by adding initially approximately two-thirds of cement to the water, followed by the additive if any, and then the remaining one-third of cement. Mixing shall be done for a sufficient time to produce a grout of uniform consistency.

The grout mixing process shall utilize a recirculating system where the grout is continuously discharged and recharged into the mixing unit during the mixing period. After mixing, grout shall be kept continuously agitated.

Grout shall be passed through a nominal 1.2 mm wire cloth/sieve to ensure a uniformly mixed grout prior to injection. Grout shall be used as soon as possible after mixing and in any case within 30 minutes of adding cement, unless approved retarding agents are used.

Grout pumps shall be efficient and capable of running continuously for the duration of the grouting operation. Pump shall be capable of pumping the specified grout at a rate appropriate to that required for the operation.

Any alternative mixing procedures proposed by the Contractor shall be approved by the Engineer before application.

iv. Grouting

Grouting shall be carried out by use of supply lines directly connecting the pumps to the down-hole grout tubes. Grout shall be injected through a grout tube to the bottom of the hole, at an injection pressure of not more than twice the overburden pressure measured at the top of the soil nail. The grout tubes shall have a minimum internal diameter of 12 mm to ensure that blockages shall not occur during grouting operations and shall also be sufficiently robust to ensure that they are not damaged during handling.

During the grouting operation, the grout shall displace all air and water and fill the hole in a continuous operation until the emerging grout is of the same consistency as the grout being pumped in. The grout level shall then be checked by sitting for 5 minutes and top-up grout introduced if necessary to ensure that the soil nail is fully grouted.

Remaining void at the top of the drill hole shall be plugged flush to the slope faces using a dry-packed 1:3 cement: sand mix. Grout that has overflowed from the hole shall be discarded and disposed as waste to the satisfaction of the Engineer.

Alternative methods to ensure that soil nails are fully grouted may include over-pouring the grout using a PVC tube extended sufficiently to allow for grout losses and prevent the formation of a horizontal construction joint in the grout. The choice of method shall be adapted to the geology of the material and the extent of grout loss encountered. The degree of rock fracturing or presence of fill shall be used to assess the affect grout loss.

Soil nail shall be protected from accidental disturbance after grouting has been completed to ensure that damage of the grout/soil and grout/nail bond does not occur.

v. Loss or Leakage of Grout

If, during the grouting of any hole, the grout take increases suddenly by a significant amount, Engineer shall be immediately informed with drilling records and grouting records.

If, during the grouting of any hole, grout is found to flow from adjacent grout holes in quantities which in the opinion of the Engineer are sufficient to interfere seriously with the grouting operation or to cause appreciable loss of grout, the adjacent holes shall be temporarily capped and the rebar shall be removed from the grouted hole. Grouting, re-drilling and re-grouting the hole shall be done subsequently.

If, during the grouting of any hole, grout is found to flow from joints in the geological formation at the Site or any other locations, plugging or caulking the leaks shall be done in a manner agreed by the Engineer.

vi. Fitting of Galvanized Nuts and Bearing Plates

The bearing plate shall be fitted at the head of the soil nail concentrically to the steel reinforcement with a tolerance of 5 mm and perpendicular to the steel reinforcement with a tolerance of 3°.

The methods used for bedding the bearing plate shall ensure void-free contact over the full area of the plate. Locking tight the nuts on soil nails shall be done after the grout has attained a minimum compressive strength of 20 MPa.

vii. Construction Conformity Record

Submit conformity records for each soil nail installation. The record shall include the following:

(a) Soil nail identification number
(b) Bearing, inclination, position, depth, and diameter of the formed drill hole
(c) Soil/rock type encountered with depth during drilling
(d) Water levels
(e) Drilling rates
(f) Cleaning procedure
(g) Type and age of cement
(h) Concentration and type of additive (if any)
(i) Water/cement ratio
(j) Bleed characteristics of grout
(k) Flowability characteristics of grout
(l) Mixing equipment used
(m) Mixing time
(n) Size of grout pipe and length
(o) Method of grouting
(p) Time intervals between completion of soil nail hole drilling and start of grout injection
(q) Time of completing grout injection
(r) Volume of grout injected
(s) Average injection pressure
(t) Times and details of any interruptions
(u) Test specimens taken and 7 and 28 days grout strength obtained
(v) Estimated elastic extension for Suitability Test and Acceptance Tests

d. Isolated Nail Head Construction

Two types of isolated nail heads, as Bearing Plate Method and Concrete Pillow Method, shall be used with Coated Metallic Mesh. Properties of Coated Metallic Mesh shall be as specified in Table 701-3.

i. Bearing Plate Method

Nail head consist with Bearing Plate shall be firmly fixed to the Soil Nail on top of coated metallic mesh without leaving any gaps by a nut, as shown in Drawings. Mesh shall be stretched sufficiently to achieve minimum slack.

Nail head with steel plate shall be in a plane normal to the nail axis clamped down with galvanized nut and washers/wedge washer to the clamping down forces of 0.2 kNm (min) or as shown in the design Drawings, using a calibrated torque wrench. Bearing Plate installation shall only be carried out after the grout have reached at least 7-days strength (> 20 MPa). The galvanized thread of the rebar and the nuts shall be coated with approved zinc-rich paint before/after tightening. Bearing plate shall be fully touch with coated metallic mesh and ground without leaving any gap between bearing plate and mesh with ground.

ii. Concrete Pillow Method

Nail head consist with two parts; namely, concrete pillow and steel plate fixed to the pillow by a nut, as shown in Drawings.

Excavation for soil nail head shall be done to dimensions showing in the Drawings or as instructed by the Engineer. All necessary accessories as shown in the Drawings to be installed and in-situ construction with Concrete C30/20 shall be carried out as shown in the Drawings or as instructed by the Engineer.

Nail head with steel plate shall be in a plane normal to the nail axis clamped down with galvanized nut and washers/wedge washer to the clamping down forces of 0.2 kNm (min) or as shown in the design Drawings, using a calibrated torque wrench. Nail head construction shall only be carried out after the grout have reached at least 7-days strength (> 20 MPa). The galvanized thread of the rebar and the nuts shall be coated with approved zinc-rich paint before/after tightening.

Measures to protect the newly constructed nail head against erosion such as cover the nail head with tarpaulin, etc., shall be carried out until the slope is properly protected (by guniting, etc.)

Where instructed by the Engineer, the Contractor shall uncover a maximum of 3 selected soil nail heads from the batch of soil nail head cast on any one day for examination to ensure compliance of specifications. If defective workmanship is found in any one of the 3 selected and examined nail heads, all the nail heads cast in that day shall be recasted to the Engineer's satisfaction.

e. Grid Beam

Excavation for beam shall be done to dimensions showing in the Drawings or as instructed by the Engineer. No excavation is necessary for non-embedded Grid Beams. All necessary accessories as shown in the Drawings to be installed and in-situ concrete C30/20 shall be carried out as per the drawings or as instructed by the Engineer.

Steel plate connected to the nail shall be in a plane normal to the nail axis and clamped down with galvanized nut and washers/wedge washer to the clamping down forces of 0.2 kNm (min) or as shown in the design Drawings, using a calibrated torque wrench. Beam construction shall only be carried out after the grout have reached at least 7-days strength (> 20 MPa). The galvanized thread of the re-bar and the nuts shall be coated with approved zinc-rich paint if damage the hot dip galvanized paint before/after tightening.

Measures to protect the newly constructed beams against erosion such as cover the beams with tarpaulin, etc., shall be carried out until the slope is properly protected.

Where instructed by the Engineer, the Contractor shall uncover selected beams to ensure compliance of specifications. If defective workmanship is found in selected and examined beams, all the nail beams cast in that day shall be recast to the Engineer's satisfaction.

For the desired properties of the Coated Metallic Mesh to be used for the construction of grid beams shall be as specified in Table 701-2.

Smooth finish formwork shall be used as described in Section 605.3 c. , at the places where the grid beam is fully or partially exposed or constructed on slope surfaces.

f. Coir Mesh

For Isolated Nail Head Methods and Grid Beam Method; a coir mesh shall be laid on the top of the top soil prior to proceeding with grassing/hydro seeding/planting as approved by the Engineer. The Contractor shall include the Coir mesh material laying process in method statement for the Engineer's approval.

g. Coated Metallic Mesh

For Isolated Nail Head Methods and Embedded Grid Beam Method; Coated Metallic Mesh shall be installed immediately after laying of the Coir mesh material with/without vegetation cover, as shown in the Drawings or as instructed by the Engineer. Laying of wire mesh shall be done from top to bottom. Bearing plates shall be tightened to the nails after laying the wire mesh as specified. The Contractor shall include the wire mesh and bearing plates fixing procedure in method statement for the Engineer's approval.

For Non-Embedded Grid Beam Method, wire meshes shall be laid along the slope and interconnected appropriately using connection clips or any other method approved by the Engineer, before initiating construction of Grid Beams.

h. Boundary Beam

Boundary beam shall be constructed where Isolated Nail Head Methods and the Grid Beam Method are used as shown in the drawings or as instructed by the Engineer. Excavation for boundary beam shall be done to dimensions showing in the Drawings or as instructed by the Engineer. In-situ construction with concrete C30/20 shall be carried out as shown in the Drawings or as instructed by the Engineer.

i. Shotcreting

The surface of the slopes can be shotcreted after soil nail installation to protect the surfaces from weathering and erosion instead of grassing or hydro-seeding or planting. The shotcrete shall be reinforced with galvanized wire mesh 50mm x 50mm made of diameter not less than 2 mm (SWG–14).

Slope should be prepared appropriately prior to shotcreting by removing loose or shattered rock, rock debris, soil or other loose material from the surface. Immediately prior to shotcreting, the surface shall be cleaned by an approved method such as brooming. The surface shall be left damp, but all free water shall be removed by an approved method.

Beams connecting the nail heads shall be provided with reinforcement specified in the drawings and shall be shotcreted with the same mix. The mesh shall be securely fastened with nails, staples or other types of surface anchors and to the installed soil nail plates and supported with approved spacers so that the mesh is located centrally within the shotcrete coating. Fiber or needle reinforced concrete is not an acceptable alternative to steel

reinforcing fabric. A cover of minimum 50 mm of shotcrete shall be provided to the mesh at all edges. Laps in the mesh shall not be less than 200 mm.

The shotcrete shall be carried out as specified in the "ACI 506R-05 – Guide to Shotcrete" and guidance of the Engineer's representative. The shotcrete shall have a minimum cement content of 380 kg/m^3 as discharged from the nozzle and shall have a minimum compressive strength of 30 MPa at 28 days when tested by means of 75 mm diameter cores (BS 1881: Part 120) taken from test panels and from in place shotcrete. Special additives or combination of additives as required for the process may be used subject to their approval by the Engineer.

Shotcrete shall only be applied by nozzle only using wet mix, men experienced and skilled in the work and in the presence of the Engineer's representative. Application shall be built up making several passes of the nozzle over the working area. The nozzle shall be held so that the stream of material shall impinge as nearly as possible perpendicular to the surface being coated and the velocity of discharge from the nozzle, the distance of the nozzle from the surface and the amount of water in the mix shall be regulated so as to produce a dense coating with minimum rebound of the material and no sagging as acceptable to the Engineer's representative. Rebound material shall be removed by air jet or other suitable means from the surface as work proceeds and disposed of.

Construction joints shall be kept to a minimum. The joint edge shall not taper more than 45° to the slope face and shall be cleaned and wetted by air-water jet before continuing application.

Adjoining areas not required to be shotcreted shall be protected from splash and spray rebound. Splash or rebound material on these adjoining surfaces shall be removed by air-water jet or other suitable means as work proceeds.

Prior to applying any shotcrete the Contractor shall submit to the Engineer for his approval, details of his proposed procedure, plant, materials and mix proportions. Concrete transport trucks shall not be used to mix shotcrete/concrete.

Curing shall commence within one hour of the application of shotcrete and may be by water or membrane curing (curing agent). In water curing, the surface of the shotcrete shall be kept continuously wet for at least seven days. Membrane curing agent shall consist of the application of an approved colorless curing compound to the surface of the shotcrete acceptable to the Engineer.

Short and long horizontal drains shall be installed in shotcreting area prior to shotcreting as per the Drawings or as instructed by the Engineer in accordance with the Section 702 of the Specification unless otherwise instructed by the Engineer.

Integrity of the shotcrete for hollow areas shall be checked by sounding with a hammer not more than 24 hours after placement. Alternative methods shall be used with the approval of the Engineer.

Defective areas shall be rectified by removal and replacement with fresh material with the area to be treated being a minimum of 300 mm x 300 mm and subject to the approval of the Engineer. Remove and replace shotcrete which lacks uniformity, exhibits segregation, honeycombing, or lamination or shows evidence of other defects (e.g. dry patches, sand pockets or sagged slumped material) with fresh shotcrete.

701.6 Test and Standards of Acceptance

a. Soil Nail

General

Soil nails shall undergo two types of testing, namely, Suitability Test for test nails and Acceptance Test for permanent/working nails.

The purpose of Suitability Test on test nails is to confirm that the bond strength is achieved and that the reinforcement will perform as designed prior to permanent/working soil nail installation. The Acceptance Test on permanent/working nails is a measure of quality control. Tests shall be carried out for soil nails under the direction and guidance of the Engineer. Pull-out test arrangement shall be shown in Figure 701-1 with minimum of 3 number of dial gauges.

The number of test nails to be assessed by Suitability Test shall be 2 % of the permanent/working nails with a minimum of 2 tests.

A total of 3% of permanent/working nails shall be subjected to Acceptance Test. The locations of the test nails shall be approved by the Engineer.

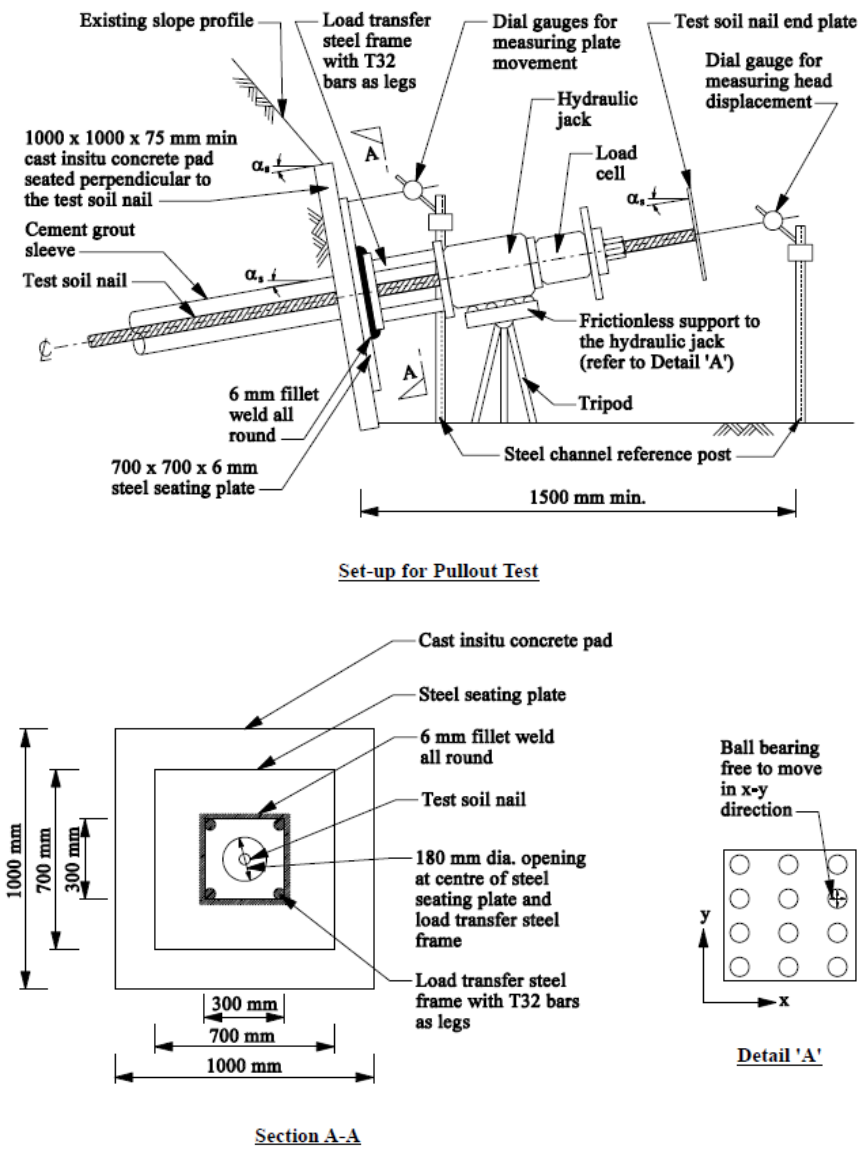

Figure 701-1: Pull-out test arrangement

Suitability (Pull-Out) Test

Prior to the installation of permanent/working nails, Suitability Test nails shall be installed to the satisfaction of the Engineer. The tests shall establish adequacy of the soil nail installation with respect to bond stresses between the nail and soil for the various ground conditions which apply and shall involve subjecting soil nails to axial pull-out loads until failure occurs, or to 80% of the ultimate tensile strength (UTS) of the soil nail rebar.

These nails shall have a minimum bond length of 3 m unless otherwise shown on the Drawings. A minimum de-bonded zone of 1 m length of soil nail shall be provided immediately behind the facing in order to prevent influence on the test result from the load test reaction system. This de-bonded length requirement shall be waived if the load test reaction system shall not exert any pressure on the slope surface within a metre radius from the circumference of the test nail drill hole.

The soil nails subject to Suitability Test are additional to the permanent/working nails shown on the Drawings. The Contractor shall inform to the Engineer, intention to carry out Suitability Test at least 3 days earlier.

Test the soil nails subject to Suitability Test to pull-out failure or to 200% of the design working load, whichever is lower.

Adjust the reinforced bar diameter or strength grade, if necessary, to ensure that the test load does not exceed 80% of the UTS of the soil nail bar. The test nails shall be installed in an identical manner, including time delays between various operations, and at locations with ground conditions representative of that of the permanent/working nails and as approved by the Engineer.

Injected grout shall have achieved a compressive strength of 30 MPa (i.e. 28 days strength) before performing the Suitability Test.

Soil nails subjected to Suitability Tests shall be loaded in the load increments specified by the Engineer and held at these loads for the period specified in Table 701-8 at the respective peak loads given by the Engineer unless otherwise specified by the Engineer.:

Table 701-8: Suitability Test – Load Increments and Minimum Periods of Observation

Loading Cycle	Test Loads (% of Design Working Load)	Minimum Period of Observation at Peak Test Load (minutes)
1	10 → 60 → 10	10
2	10 → 100 → 10	60
3	10 → 150 → 10	10
4	and thereafter the load is 200% of the Design Working Load. The test load shall be limited to 80% of the ultimate tensile strength of soil nail rebar.	180

The rate of load application shall be in the range of 3 to 5 kN/minute. At each load cycle, the load shall be held at the peak test load for the period of observation as specified in Table 701-8. The head movement shall be recorded at 1, 2, 3, 5, 6, 10, 20, 30, 50, 60, 90, 120, 150 and 180 minutes inside each cycle.

The Suitability Test shall be considered successful if all the following are satisfied:

(a) A total creep movement of less than 2 mm between the 6 and 60 minutes readings is measured during Cycle 4; and
(b) A total creep movement of less than 1mm between the 60 and 180 minutes readings is measured in Cycle 4; and
(c) The creep rate is linear or decreasing, when plotted against the logarithm of time throughout Cycle 4.

If the test nail cannot be pulled out within 80% of the ultimate tensile stress of the soil nail rebar, the bar shall be cut-off flush with the finishing ground and the remaining part of the drill hole shall be grouted.

When directed by the Engineer, the entire test nail shall be extracted from the drill hole for inspection. Unless otherwise directed by the Engineer, the void caused by the extraction of the soil nail shall be filled with grout.

If the extracted soil nail indicates that full penetration of grout into the drill hole has not been achieved, or any other test result indicates that the soil nail has not been constructed in accordance with this Specification, the Contractor shall submit revised soil nail construction procedures (such as drilling method, grout mix design and grouting techniques) to the Engineer for approval.

In such instances, Suitability Test shall be repeated on a replacement test nail. Any modifications of construction procedures, replacement nails and associated tests shall be done the Contractor's own cost.

Acceptance Test

A total of 3% of permanent/working nails, unless otherwise approved by the Engineer, shall be subjected to Acceptance Test. Of these, half shall be in the top row, a quarter in the middle row and a quarter in the bottom row. The Engineer shall nominate the locations of soil nails subject to Acceptance Test. The Engineer may direct additional locations for Acceptance Test if necessary.

A minimum de-bonded zone of 1 m length of soil nail shall be provided immediately behind the facing in order to prevent influence on the test result from the load test reaction system. This de-bonded length requirement shall be waived if the load test reaction system shall not exert any pressure on the slope surface within a metre radius from the circumference of the test nail drill hole.

Acceptance Test shall be carried out in the presence of the Engineer prior to the application of facing to the exposed ground. Injected grout shall have achieved a compressive strength of 30 MPa (i.e 28 days strength) before

performing Acceptance Test. The maximum applied load during the acceptance test shall not exceed 80% of the ultimate tensile strength of the soil nail rebar.

Soil nails subject to acceptance tests shall be loaded to the load increments and held for periods specified in Table 701-9 at the respective peak loads.

Table 701-9: Acceptance Test – Load Increments and Minimum Periods of Observation

Load Increment (% of Working Load of each test nail as shown in Drawings)	Minimum Period of Observation at Peak Test Load (minutes)
25	5
50	5
100	5
150	180 (creep test)
100	5
50	5
25	5

The above stages constitute one full cycle of testing.

The rate of load application shall be in the range of 3 to 5 kN/minute. At each load cycle, the load shall be held at the peak test load for the period of observation as specified in Table 701-9. The displacement shall be recorded at the beginning and the end of the observation period. For the creep portion of the test, record movements at 1, 2, 3, 5, 6, 10, 20, 30, 50, 60, 90, 120, 150 and 180 minutes.

The acceptance test shall be considered successful if all of the following are satisfied:

(a) A total creep movement of less than 2 mm between the 6 and 60 minutes readings is measured in Creep Test hold period; and

(b) A total creep movement of less than 1 mm between the 60 and 180 minutes readings is measured in Creep Test hold period; and

(c) The creep rate is linear or decreasing, when plotted against the logarithm of time throughout Creep Test hold period.

Where a test nail does not meet the acceptance criteria, test shall be repeated using an additional 2 soil nails in the vicinity of the nonconforming soil nail. If any soil nail fails an Acceptance Test, pertinent nail shall be abandoned and completely removed from the drill hole by a method acceptable to the Engineer. Unless otherwise instructed by the Engineer, the drill hole shall be filled by grouting. If the failed soil nail cannot be pulled out within 80% of the UTS of the soil nail bar, the bar shall be cut-off flush with the finishing ground and the remaining part of the drill hole shall be grouted. An additional soil nail shall be installed adjacent to the abandoned one for additional test. All additional work resulting from failed Acceptance tests shall be peformed at Contractor's own cost.

Testing and Measuring Equipment

Displacements shall be measured using three dial gauges mounted on a tripod or fixed to a rigid support that is independent of the jacking mechanism and the soil nail. The dial gauge shall be capable of measuring to an accuracy of 0.01 mm. Dial gauges shall be set up so as to avoid any misalignment and eccentricity to the direction of movement of the soil nail, and zeroed after alignment and initial load has been applied.

A stable datum shall be established to measure the movement at the bar head. Movements of the bar head shall be measured relative to the datum to an accuracy of ±0.1 mm.

A hydraulic jack, with a minimum travel of 150 mm, shall be used to apply the load. The load shall be applied to the soil nail via a load bridge to ensure that the surface reaction is clear of the soil nail. The test load shall be measured with an accuracy of ±1 kN. A centre hole load cell shall be added in series with the jack for use during tests.

The hydraulic jack, pressure gauge and load cell shall be calibrated as a set. Calibration certificates, which shall be less than 12 months old, shall be submitted to the Engineer for the jack, pressure gauge and load cell prior to the soil nail testing. The identification numbers on the field test equipment shall match the identification numbers on the calibration data sheets. Care shall be taken to ensure that the load cell is properly aligned with the axis of the soil nail bar and the jack.

The calibration certificate shall be accompanied by the related calibration curve and tabulated record of hydraulic pressure against jack load. The calibration shall be performed for the loading and unloading operations of the jack over its full working range.

Details of the installation, load measuring and movement measuring devices shall be submitted to the Engineer for approval prior to testing.

Records of Tests

Keep records of any Suitability Test and Acceptance Test carried out. These records shall include:

(a) Date

(b) Soil nail number

(c) Number of tests carried out

(d) Load/ extension measurements

(e) Any variations from the specified procedure

(f) Details of test results

(g) Any unforeseen or unusual conditions encountered

(h) Time intervals between completion of test soil nail hole drilling and start of grout injection

The soil nail head and bearing plate movements shall be tabulated and plotted on a graph for assessment together with all other relevant information.

b. Grout

Cube test strength results (according to ASTM C942 and test cube size should be 50 mm) shall be provided prior to commencement of work to demonstrate that the mix meets the design minimum strength. Cube strength shall be obtained from six grout cubes (after seven days and twenty eight days respectively – three cubes for each test). Seven days cube strength should be tested in order to confirm 28 days cube strength of 30 MPa. Number of test samples shall be decided by the Engineer. Bleeding < 0.5 % when two successive readings show no further expansion or bleeding. In addition, the water shall be re-absorbed within 24 hours (ASTM C940-98), Flow cone efflux test time < 20 seconds, (ASTM C939-02).

For cubes tested at an age of 28 days the cube strength shall conform to the following requirements:

a) The average strength determined from any group of four consecutive test cubes shall exceed the specified characteristic strength by at least 0.5 times the current margin

b) Each individual test result shall be greater than 85% of the specified characteristic strength.

If the average strength of any group of four consecutive test cubes fails to meet the first requirement (a) then all grout mixed in all batches from the first batch to the last batch from which samples were taken to make the test cubes, together with all the intervening batches shall be deemed not to comply with the strength requirements.

If only one cube fails to meet the second requirement (b) then that result may be considered to represent only the particular batch of grout from which that cube was taken.

The Contractor shall take such remedial action as the Engineer may order, including the removal of the relevant cement grout, and shall, before proceeding with the grouting, submit details of the action proposed to ensure that the cement grout complies with the requirements of the Specification for the Engineer's approval.

Acceptance criteria shall be that the average 28 days compressive strength of 3 cubes exceeds the characteristic strength of the cement grout and that the difference between the greatest and least strength is not more than 20 percent of the average.

The 7 days test results shall generally be made use of as an indicator of the strength at 28 days and unless otherwise decided by the Engineer, no decision regarding non-acceptance of the concrete shall be made using these results.

c. Shotcrete

Test cube strength results (of 75 mm dia. core) shall be provided prior to commencement of work to demonstrate that the mix meets the design minimum strength. Cube strength shall be obtained from six shotcrete cores (after seven days and twenty-eight days respectively – three cubes for each test). Seven days cube strength should be tested in order to confirm 28 days cube strength of 30 MPa. Number of test samples shall be decided by the Engineer.

For cubes tested at an age of 28 days the cube strength shall conform to the following requirements:

a) The average strength determined from any group of four consecutive test cubes shall exceed the specified characteristic strength by at least 0.5 times the current margin

b) Each individual test result shall be greater than 85% of the specified characteristic strength.

If the average strength of any group of four consecutive test cubes fails to meet the first requirement (a) then all shotcrete mixed in all batches from the first batch to the last batch from which samples were taken to make the test cores, together with all the intervening batches shall be deemed not to comply with the strength requirements.

If only one cube strength fails to meet the second requirement (b) then that result may be considered to represent only the particular batch of shotcrete from which that cube was taken.

The Contractor shall take such remedial action as the Engineer may order, including the removal of the relevant shotcrete, and before proceeding with the shotcreting, shall submit details of the action proposed to ensure that the shotcrete complies with the requirements of the Specification for the Engineer's approval.

Acceptance criteria shall be that the average 28 days compressive strength of 3 cores exceeds the characteristic strength of the shotcrete and that the difference between the greatest and least strength is not more than 20 percent of the average.

The 7 days test results shall generally be made use of as an indicator of the strength at 28 days and unless otherwise decided by the Engineer, no decision regarding non-acceptance of the concrete shall be made using these results.

701.7 Measurement and Payment

a. Measurement

Platform

Temporary works, such as temporary platform preparation prior to soil nailing shall be paid as a Lump sum item as indicated in the Bills of Quantities. Payment shall be made as;

60% of the lump sum under this item shall be certified upon the establishment of temporary platform for soil nailing works. 30% of the amount upon progress of soil nailing works as approved by the Engineer and the remaining 10% shall be paid when the temporary platform has been totally removed and site has been cleaned by the Contractor.

Soil Nails

The measurement shall include for drillings, nail bar and grouting, and the quantity shall be measured in linear meter along the nail starting from interface between facing (i.e. bottom of shotcrete face, grid beam face, pillow face or bearing plate) and soil to the tip of the nail (i.e. only the grouted length shall be measured for payment). No payment shall be made for the nail inside the nail head. Payment shall be made only for the grouted length of the soil nail reinforcement.

Coated Metallic Mesh for Bearing Plate Method

Coated Metallic Mesh shall be measured in Sq.m. No extra payment will be given for lapping of the Coated Metallic Mesh as specified.

Bearing Plate for Bearing Plate Method

Bearing plate soil nail head shall be measured in numbers including excavation, nut and washers as specified, including fixing against Coated Metallic Mesh and to the nail head.

Boundary Rope for Bearing Plate Method

Rope shall be measured in linear meters. No extra payment for lapping and looping for gripping at connections.

Rope Anchors for Bearing Plate Method

Rope anchors shall be measured in linear meters including drillings, supplying anchor and grouting, and the quantity shall be measured in linear meter along the anchor starting from interface between anchor eye and soil to the tip of the anchor (i.e. only the grouted length shall be measured for payment). No extra payment shall be made for the anchor eye.

Concrete Pillow

Soil nail heads including concrete pillow shall be measured in numbers including excavation, form work, reinforcement bars, fixing of MS bearing plate, nut and washers inside the head, insitu concrete C30/20 and plate, nut, washer to be used to fix Coated Metallic Mesh to the nail head.

Grid Beam

Concrete and tor steel required for beams in grid beam structure shall be measured in linear meters including nail heads and reinforcements. No separate payment for excavation, formwork and dowels will be paid and cost shall be included in beam rate.

Coated Metallic Mesh

Coated Metallic Mesh (excluding Bearing Plate Method) shall be measured in Sq.m. No EXTRA payment will be given for lapping of the Coated Metallic Mesh.

Boundary Beam

Concrete and tor steel required for boundary beam shall be measured in linear meter. No separate payment for excavation and dowels will be paid and cost shall be included in beam rate.

Coir Mesh

Coir mesh shall be measured in Sq.m. No payment of lapping of the Coir mesh.

Shotcrete

Shotcrete face shall be measured in square meters including net and dowels. Area of the nail heads connecting beams shall be deducted from the total shotcreting area.

Shotcrete – Nail Head Connecting Beam

Nail heads connecting beams in shotcrete face shall be measured in linear meters including nail heads, reinforcements, dowels and shotcreting.

Pull-out Test

Pull-Out tests shall be measured in numbers and pull out tests are required for test nails prior to the commencement of work for design verification and acceptance of construction work at site. Pull-Out tests shall be performed for 2% as test nails and 3% as acceptance of construction work at site of the total number of working soil nails subject to a minimum of two and three.

b. Payment

Soil Nails

The quantities determine for soil nails as provided above shall be paid for at the Contract unit rate which price shall be full compensation for all labour, materials, tools and incidentals necessary for completion of the work including drilling, drilling through incidental boulders, fabrication and installation of all accessories for soil nails and grouting.

Coated Metallic Mesh for Bearing Plate Method

The quantities determine for Coated Metallic Mesh for Bearing Plate Method as provided above shall be paid for at the Contract unit rate which price shall be full compensation for all labour, materials, tools and incidentals necessary for completion of the work including preparation of slope, materials for Coated Metallic Mesh, dowels, sewing ropes, clips fabrication and installation of all accessories of the Coated Metallic Mesh unless otherwise specified.

Bearing Plate for Bearing Plate Method

The quantities determine for bearing plates as provided above shall be paid for at the Contract unit rate which price shall be full compensation for all labour, materials, tools and incidentals necessary for completion of the work including fabrication, galvanizing and installation of all accessories to soil nails against the metallic mesh.

Boundary Rope for Bearing Plate Method

The quantities determine for boundary ropes as provided above shall be paid for at the Contract unit rate which price shall be full compensation for all labour, materials, tools and incidentals such as dowels, sewing ropes, wire rope grips, shackles to be used to fix wire rope as per the Drawings necessary for completion of the work including fabrication, galvanizing and installation against the metallic mesh.

Rope Anchor for Bearing Plate Method

The quantities determine for rope anchors as provided above shall be paid for at the Contract unit rate which price shall be full compensation for all labour, materials, tools and incidentals necessary for completion of the work including drilling, drilling through incidental boulders, fabrication and installation of all accessories for rope anchors and grouting.

Concrete Pillow

The quantities determine for nail heads including pillow as provided above shall be paid for at the Contract unit rate which price shall be full compensation for all labour, materials, tools and incidentals necessary for completion of the work including preparation of slope, formwork, reinforcement, concreting required for concrete pillow construction and fabrication and installation of all accessories of the nail head.

Grid Beam

The quantities determine for grid beams as provided above shall be paid for at the Contract unit rate which price shall be full compensation for all labour, materials, tools and incidentals necessary for completion of the work including preparation of slope, formwork, reinforcement, concreting required for grid beam construction and fabrication and installation of all accessories of the grid beams along with dowels. No separate payment shall be made for the overlapping area of the beams at connections.

Coated Metallic Mesh

The quantities determine for Coated Metallic Mesh (excluding Bearing Plate Method) as provided above shall be paid for at the Contract unit rate which price shall be full compensation for all labour, materials, tools and incidentals necessary for completion of the work including preparation of slope, materials for Coated Metallic Mesh, dowels, fabrication and installation of all accessories of the Coated Metallic Mesh.

Boundary Beam

The quantities determine for boundary beams as provided above shall be paid for at the Contract unit rate which price shall be full compensation for all labour, materials, tools and incidentals necessary for completion of the work including preparation of slope, formwork, reinforcement, concreting required for boundary beam construction and fabrication and installation of all accessories of the boundary beams along with dowels. No separate payment shall be made for the overlapping area of the beams at connections.

Coir Mesh

The quantities determine for Coir Mesh as provided above shall be paid for at the Contract unit rate which price shall be full compensation for all labour, materials, tools and incidentals necessary for completion of the work including preparation of slope, materials for coir mesh, laying of coir mesh.

Shotcrete

The quantities determine for shotcrete as provided above shall be paid for at the Contract unit rate which price shall be full compensation for all labour, materials, tools and incidentals necessary for completion of the work including preparation of slope, shotcreting, net and construction and fabrication and installation of all accessories of the shotcrete face along with dowels.

Shotcrete – Nail Head Connecting Beam

The quantities determine for nail heads connecting beams as provided above shall be paid for at the Contract unit rate which price shall be full compensation for all labour, materials, tools and incidentals necessary for completion of the work including preparation of slope, reinforcements, nail heads, shotcreting and construction, fabrication

and installation of all accessories of the connecting beams along with dowels. No separate payment shall be made for the overlapping area of the beams at connections.

Pay Item	Description	Pay Unit
701(1)	Temporary working platform for soil nailing works	Lump Sum
701(2)a	Soil nails (more than 12m length) inserted into bore hole with grouting and coupling (specify the nail dia. and hole dia.).	Linear meter
701(2)b	Soil nail (less than or equal to 12m length) inserted into bore hole with grouting (specify the nail dia. and hole dia.).	Linear meter
701(3)	Concrete Pillow method including excavation, form work, reinforcement bars, fixing of MS bearing plate, nut and washers inside the head, insitu concrete C30/20 and plate, nut, washer to be used to fix Coated Metallic Mesh to the nail head.	Numbers
701(4)a	Coated Metallic Mesh for Embedded Grid Beam method including connecting clips, and other necessary accessories	Square meter
701(4)b	Coated Metallic Mesh for Bearing Plate method including bearing plate, dowels, boundary ropes, boundary rope anchors, connecting clips, nut, washers and other necessary accessories	Square meter
701(4)c	Coated Metallic Mesh for Concrete Pillow Method including connecting clips, and other necessary accessories	Square meter
701(4)d	Coated Metallic Mesh for Non-Embedded Grid Beam method including connecting clips, and other necessary accessories	Square meter
701(5)	Coir mesh	Square meter
701(6)	Concrete C30/20 boundary beams including slope preparation, excavation, formwork, RF and other necessary accessories	Linear meter
701(7)	Grid beam – concrete C 30/20 grid beams with nail heads including slope preparation, excavation, formwork, RF and other necessary accessories	Linear meter
701(8)	Shotcreting (wet mix) with concrete Grade 30	Square meter
701(9)	Nail heads connecting beams with nail heads in shotcrete face	Linear meter
701(10)	Pull-Out test for test nails and working nails	Numbers
701(11)	Bearing plate nailhead including nut washer for bearing plate method	Numbers
701(12)	Boundary rope (specify diameter) for bearing plate method	Linear meter
701(13)	Rope anchor (less than or equal to 12m length) inserted into bore hole with grouting (specify the nail dia. and hole dia.) for bearing plate method	Linear meter
701(14	Pull-Out test for rope anchors	Numbers

702 HORIZONTAL DRAINS

702.1 Description

This Specification sets out the requirements for the drilling and installation of horizontal short or long drains in soil/rock into natural and man-made slopes. The work includes:

(a) The drilling of drain holes at specified locations, orientations and depths

(b) The installation of slotted UPVC pipes of specified diameter, thickness and length, wrapped in a geotextile filter fabric as directed by the Engineer

(c) The connection of the installed horizontal drains to the existing storm water drain network as shown on the Drawings.

702.2 Materials

The materials used for the horizontal drains shall meet the requirements of the following, unless otherwise specified.

a) The drain pipe shall be of rigid un-plasticized polyvinyl chloride (UPVC) complying with SLS 147 – PNT 11 unless otherwise specified.

Depending on the type used, and as specified in drawings, each drain comprises of an inner and outer pipe, and the outside diameters and the wall thickness of each nominal pipe size shall be as given in Table 702-1 below (with reference to Section 702.3 a. – Type 01, 02, 03).

Table 702-1: Pipe Diameters and Wall Thickness

	Outer Pipe [b]	**Inner Pipe**		
Nominal Diameter (mm) [a]	110	90	75	50
Minimum Mean Outside diameter (mm)	110	90	75	50
Minimum wall thickness (mm)	6.6	5.4	4.5	3.0

a - Size as in the Drawings, b - Exclusive for type 03 drains

A UPVC cap complying with the same standard shall be fitted to the upstream end of each drain pipe.

The pipes shall be provided with slots of width between 0.90 mm and 1.10 mm, extending to a minimum depth equal to 3/8 of the outside diameter of the pipe and a maximum depth equal to half the outside diameter of the pipe, and spaced at 25 mm apart (refer Figure 702-1).

The slots shall be cut in groups of twelve. Each set of twelve slots shall be at 30° to the horizontal and each alternate group shall be orientated to lie within the top 240° of the circumferences. In this fashion, the bottom 120° of the circumference of the pipe shall remain uncut over its entire length (see Figure 702-2).

In Horizontal Long drains, the pipe shall be un-slotted for a length of 1 m from the outlet end, or whatever length as directed by the Engineer.

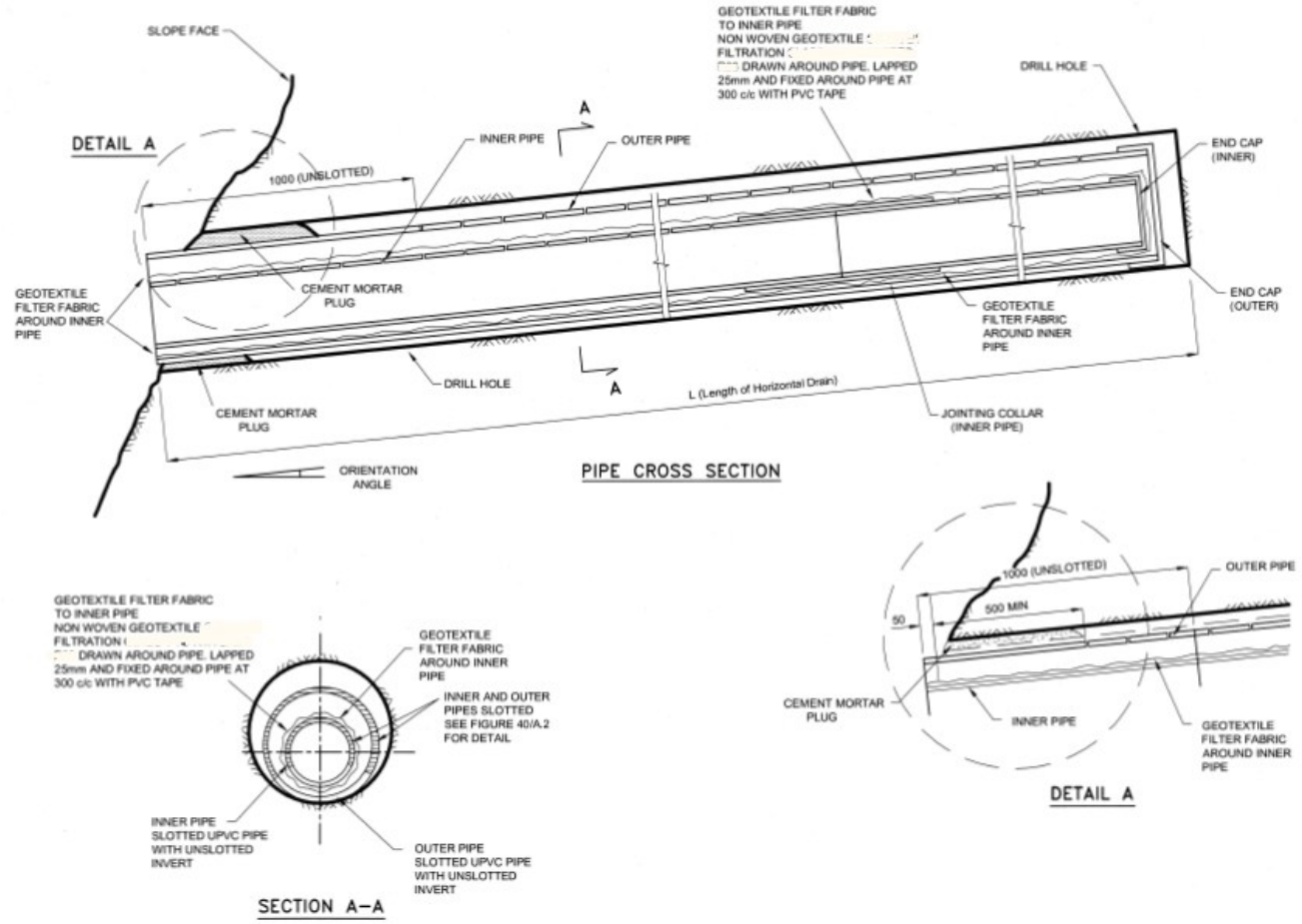

Figure 702-1: Type 3 – Horizontal Drain Detail

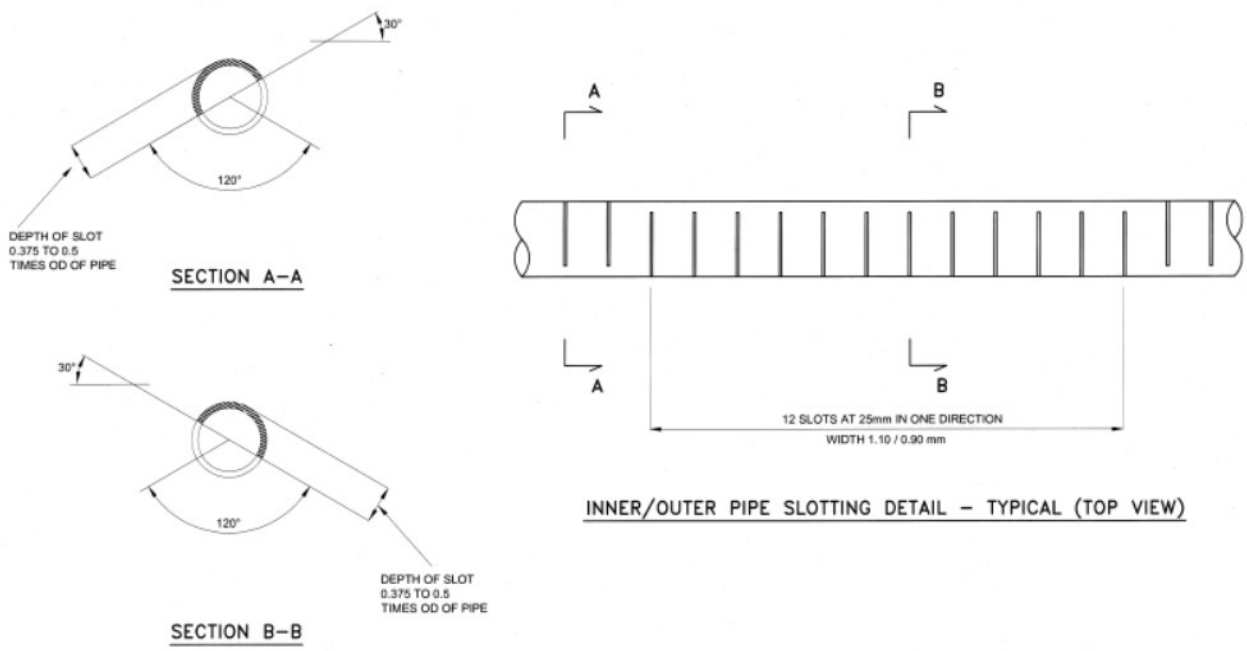

Figure 702-2: Horizontal Drain Perforation/slotting Detail

b) Geotextile shall be having physical and filtration properties specified in Section 905 : Table 905-1. The geotextile forming the filter fabric shall be a non-woven geotextile conforming to Specification, hydrophically treated to reduce surface tension and shall be abrasion resistant to resist damage during installation to the satisfaction of the Engineer.

702.3 Construction Requirements

a. General

Horizontal drain shall be constructed as shown in the Drawings or as directed by the Engineer. Following type of horizontal drains to be selected as per site condition.

1. Perforated pipe without filter fabric
2. Perforated pipe wrapped with filter fabric
3. Outer and inner perforated pipe and only inner pipe wrap with filter fabric

b. Location of Drain Holes

The locations, orientations and lengths of the drain holes shall be in accordance with the Drawings and or as directed by the Engineer.

The drain holes shall be set out as detailed. The maximum allowable tolerances for locating the position of drain holes shall be ± 100 mm vertically, ± 300 mm horizontally. Facilities shall be provided to enable the inspection of the drain hole locations by the Engineer.

c. Drilling

Only rotary or rotary-percussion drilling equipment shall be used to carry out drilling. Effective dust suppression or containment devices shall be provided in accordance with the Construction Safety Plan.

Drilling of holes shall be carried out in a manner which does not affect the stability of the cut batter. In particular, due care shall be taken to avoid the introduction of large volumes of water into the slope. Drilling lubricants other than air shall not be used. Ground water outflow resulting from the drilling process shall be directed to a holding tank to enable settlement of the sediment resulting from the drilling.

The holes for the horizontal drains shall be drilled to an inclination of 10° dipping towards the exposed slope face or to the inclinations shown on the Drawings. Drill holes shall be at least 125mm in diameter in the case of Type 03 drains to allow installation of the slotted outer UPVC pipe. For Type 01 and 02 drains, drill hole shall be of a diameter which allows the installation of inner UPVC pipe with or without geotextile wrap as specified without any obstruction. Holes shall be smooth, clean and true to size.

Holes shall be drilled in a straight alignment. Maximum permissible deviation of the holes shall not exceed 2° (as measured on a horizontal plane). Deviation from straight shall not exceed 20 mm in any 3 m length of hole.

Any hole which is more than 1° from the specified inclination angle is not acceptable and shall be re-drilled, unless the Engineer authorizes acceptance of the particular hole.

d. Temporary Casing

In the case of drill holes penetrating through material likely to collapse, temporary casing shall be installed to protect the drill holes from caving in whilst drilling is in progress. The casing shall be retracted after each UPVC pipe has been successfully installed.

The Contractor shall be responsible for determining whether temporary casing is required. If extraction of the casing results in damage to an installed UPVC pipe, a new hole shall be drilled and/or another UPVC pipe shall be re-installed at the discretion of the Engineer and at the Contractor's own cost.

Any abandoned hole(s) shall be backfilled and properly sealed at the Contractor's own cost, subject to the approval of the Engineer. The Contractor can propose alternative procedures for supporting collapsible material during drilling and the installation of the UPVC pipe.

Drill holes shall be cleared of all deleterious material on completion of drilling. Cleaning shall be carried out by flushing with water, or water in conjunction with air, using side jet bits, so as to ensure removal of all drill cuttings from the walls and bottom of the drill holes.

An additional drill hole length of 100 mm shall be provided to leave space for the deposition of cuttings that cannot be flushed out of the end of the drill hole.

e. Installation of Drain Pipes

Unless directed otherwise by the Engineer, when Type 03 is used; an outer and an inner UPVC drain pipe shall be installed in each drill hole, with the un-slotted 120° of the circumference section of the pipe facing the underside (refer Figure 702-1). Type 01 and 02 shall be installed as shown in Drawings or as directed by the Engineer.

The pipe shall be jointed either as spigot and socket joints, or as butt joints with a sleeve extending about 50 mm over the end of each pipe. Sleeve couplers shall not affect the drain installation process. Joints shall be secured with PVC solvent cement.

The upstream end of each pipe shall be sealed with a UPVC cap secured with PVC solvent cement.

The geotextile filter fabric shall be wrapped around the inner pipe with an overlap length of 25 mm and fixed with PVC tape at 300 mm centres.

After installation of an outer pipe, the annular space between the drilled hole and the outer pipe shall be tightly plugged with 1:3 cement:sand mortar for a length of at least 0.5 m at the outlet end of the hole.

Connect all drain pipes to the existing storm water network as shown on the Drawings.

702.4 Measurement and Payment

a. Measurement

For horizontal drains; drillings, PVC perforated pipe (PNT 11), end cap and filter fabric (Geo-textile) (if any) shall be measured by the linear meter.

b. Payment

The quantities determine for horizontal drains as provided above shall be paid for at the Contract unit rate which price shall be full compensation for all labour, materials, tools, temporary casing and incidentals necessary for completion of the work including drilling, geotextile rapping (if any), fabrication and installation of horizontal drains.

Pay Item	Description	Pay Unit
702(1)	Type 01 - Horizontal drains of perforated PVC pipe (specify diameter)	Linear meter
702(2)	Type 02 - Horizontal drains of perforated PVC pipe with filter fabric (specify diameter)	Linear meter
702(3)	Type 03 - Horizontal drains of perforated PVC pipe with outer and inner pipes wrap with filter fabric (specify diameter)	Linear meter

703 MONITORING

703.1 Description

This work shall consist of installing maintaining and monitoring of Monitoring Equipment as specified in section 0The work shall be carried out in accordance with this Specification and in conformity with the Drawings or as directed by the Engineer.

703.2 Measurement and Payment

a. Measurement

Instrumentation shall be measured as a Provisional Sum item for the cost of providing, installation of the Monitoring Equipment.

Monitoring and testing shall be measured as a Lump Sum item for the cost of maintaining and monitoring of the Monitoring Equipment.

b. Payment

Payment shall be made as a Provisional Sum and shall be payable when the Contractor has completed the work satisfactory as per the section 1303.5 .

Pay Item	Description	Pay Unit
703(1)	Instrumentation as per Section 1300	Provisional Sum
703(2)	Monitoring & testing as per Section 1300	Month

800 QUALITY CONTROL OF WORK

801 QUALITY CONTROL PLAN

The Contractor shall prepare a Quality Control Plan which shall detail quality control procedures such as to demonstrate that the requirements of the Conditions of Contract in respect of quality are met. The Quality Control Plan shall provide a formal framework for the approval of the Works by the Engineer.

In particular the Quality Control Plan shall include:

1. Quality control procedures in respect of the selection and control of materials, distinguishing between approval testing and compliance testing;
2. Quality control procedures in respect of construction operations, identifying procedures for production control and procedures for survey control;
3. Procedures for the Contractor and Engineer to approve construction works.

In preparing the Quality Control Plan the Contractor shall take into consideration the requirements and obligations of the Engineer in respect of checking and inspection of the Works.

The Contractor shall appoint a Quality Control Manager who shall be responsible for ensuring that the quality control procedures set out in the Quality Control Plan are adhered to. The Quality Control Manager shall have independent control of all quality control activities.

802 QUALITY CONTROL TESTS DURING CONSTRUCTION

The material supplied, and work carried out shall conform to the relevant sections of these Specifications covering each type of work. For ensuring quality of construction, the materials and work shall be subjected to quality control tests prescribed in Table 802-1. These tests shall be carried out as specified in the relevant sections of this Specification. The testing frequencies given in Table 802-1 are desirable minimum values and the Engineer may direct the Contractor to carry out tests as frequently as he deem necessary to satisfy himself that the materials and the work comply with the Specification.

Table 802-1: Quality Control Tests and their Frequencies

Type of material	Type of test	Quantity of material or part thereof for which minimum one test to be carried out
Cement	Acceptance testing of cement such as - Fineness - Chemical composition - Compressive strength - Setting time - Soundness	One test per source as directed by the Engineer
Fine aggregates (Sand)	- Sieve analysis - Water absorption - Turbidity	One test per 50 m^3 or as directed by the Engineer
Coarse aggregates	- Sieve analysis - Aggregate impact value (AIV) - Water absorption - Flakiness Index	One test per 50 m^3 or as directed by the Engineer
Concrete	- Slump test - Crushing strength test	One test per 10 m^3 or as directed by the Engineer
Tor steel reinforcements	- Tensile strength	One test per 0.5 t or as directed by the Engineer

Geo-textile	- Grab strength - Sewn seam strength - Tear strength - Puncture strength - Permittivity - Apparent opening size	As directed by the Engineer
Grout	- Test for bleeding - Flow cone efflux time test - Crushing strength test	One test per 120 m or as directed by the Engineer
Fill/Backfill	- Sieve analysis - Liquid limit - Plastic limit - Modified Proctor test - Layer thickness at spreading - Field moisture content - Degree of compaction	One test per 50 m^3 or as directed by the Engineer
Shotcrete Concrete	- Crushing strength test	One test per 5 m^3 or as directed by the Engineer
Soil Nail (Rebar)	- Tensile strength - Galvanized thickness	One test per 100 m of soil nail rebar or as directed by the Engineer
Coated Metallic Mesh	- Tensile strength of the wire - Galvanized thickness - Diameter of Steel wire - Mesh/ Net width (opening size)	One test per 500 m^2 or as directed by the Engineer
Rock Fence Posts	- Post Galvanized thickness - Section dimension measurement	One test per 2t of posts or as directed by the Engineer
Rock Fence Mesh	- Tensile strength of the wire - Galvanized thickness - Diameter of Steel wire - Mesh/ Net width (opening size)	One test per 500 m^2 or as directed by the Engineer

A fresh series of construction control tests shall be undertaken every time there are changes in the sources of the materials or in the appearance of the materials as visually assessed by the Engineer.

Additional numbers and type of construction control tests shall be carried out if it is considered necessary to do so by the Engineer for monitoring the variability of materials brought to work site or stockpiled by the Contractor.

803 MATERIAL TESTING

The physical properties and Engineering characteristics of the materials mentioned in the Specification shall be established through appropriate tests on representative samples collected in such a manner and at such a frequency as specified and instructed by the Engineer. The tests shall be carried out in accordance with test methods mentioned in the Specification after taking into account the appropriateness of the test methods for particular applications under consideration.

900 MATERIAL DETAILS

901 AGGREGATE

901.1 Aggregate for Cement Concrete (Section 601 and Others)

Aggregate for concrete shall consist of coarse aggregate (aggregate substantially retained on the 5 mm sieve) and fine aggregate (aggregate substantially passing the 5 mm sieve).

Unless otherwise specified the coarse aggregate shall be crushed rock from an approval quarry and the fine aggregate shall either be crusher fines or river sand.

Aggregate from marine sources will not be approved. The aggregate shall be free of salt and organic matter. The permissible maximum salt content shall be as follows:

Table 901-1: Permissible maximum salt content in aggregate

MATERIAL	SODIUM CHLORIDE	SOLUBLE SULPHATES
Fine Aggregate	0.10 %	0.25 %
Coarse Aggregate	0.05 %	0.25 %

The aggregate both coarse and fine shall be hard durable and clean and shall be from weathered, soft, laminated or elongated pieces, deleterious matter, dust and clay.

The Aggregate Impact Value (AIV) of the coarse aggregate determined as given in Section 1001 shall not be greater than 45. The flakiness index of the coarse aggregate when determined by the sieve method described in BS-812 shall not exceed 35%.

Where crusher fines are used as fine aggregate, they shall be derived from rock meeting the requirements of coarse aggregate given above.

The preferred grading for coarse aggregate and fine aggregate given in Table 901-2 and Table 901-3 respectively. The aggregate grading shall be determined as given in Section 1001 .

Table 901-2: Grading Limits for Coarse Aggregate

Sieve Size (mm)	Percentage by mass passing BS Sieve for nominal sizes graded -sized aggregate	
	20 mm-5mm	5 mm
50.0	-	-
37.5	100	-
20.0	90 to 100	-
14.0	40 to 80	-
10.0	30 to 60	100
5.0	0 to 10	45 to 100
2.36	-	0 to 30

Table 901-3: Preferred Grading for Fine Aggregate for Concrete

Sieve Size	Percentage by mass passing BS Sieve			
	Overall limits	Additional limits for grading		
		C	M	F
10.00 mm	100	-	-	-
5.00 mm	89 to 100	-	-	-
2.36 mm	60 to 100	60 to 100	65 to 100	80 to 100
1.18 mm	30 to 100	30 to 90	45 to 100	70 to 100
600 µm	15 to 100	15 to 54	25 to 80	55 to 100
300 µm	5 to 70	5 to 40	5 to 48	5 to 70
150 µm	0 to 15	-	-	-
NOTE: Individual sands may comply with the requirements of more than one grading. Alternatively, some sands may satisfy the overall limits but may not fall within any one of the additional limits C, M or F. In this case and where sands do not comply with the above table an agreed grading envelope may also be used provided that the supplier can satisfy the Engineer that such materials can produce concrete of the required quality.				

902 CEMENT

Cement used shall normally be Ordinary Portland Cement (OPC) complying with the requirements of SLS 107 or Blended Hydraulic Cement complying with the requirements of SLS 1247 given that the other required parameters are within the limits given in this specification. The cement shall conform to the requirements given therein, in respect of the following:

a) Fineness
b) Chemical composition
c) Compressive strength
d) Setting time
e) Soundness

Tests in respect of the above shall be carried out as specified in Section 902.1 .

Cement shall be brought to Site in quantity not exceeding three months requirements. Each consignment of cement delivered to Site shall be accompanied by a certificate of testing as per BS, BS EN or SLS standards. Any extra test instructed by the Engineer whose result proves the material to be out of specification shall be carried out at no extra cost. If for any reason the period of storage of consignment of cement exceeds three months, a representative sample of the cement shall be retested to confirm its suitability before use at no extra cost.

The Contractor shall provide suitable means of storing and protecting the cement against dampness, Cement which, for any reason has become partially set or which contains lumps of caked cement shall be rejected.

No additives for cement shall be used unless agreed by the Engineer.

902.1 Cement Grout

Cement grout for grouting dowels shall consist of Ordinary Portland Cement (OPC) and water mixed in the proportions necessary for the intended purpose.

Cement used for grouting soil nails/ dowels shall be CEM 1, Portland cement complying with (BS EN 196 or BS EN 197). Grout material should be non-expansive and non-shrinkage material. Therefore, admixture has to be added to avoid shrinkage effect of cement. The Contractor should be obtained prior approval for the admixture before use site at site from the Engineer. The grout should comply with the specifications given in Table 701-1.

The grout shall be mixed until a uniform consistency is obtained and shall normally be used within 45 minutes of mixing.

902.2 Cement Mortar

Cement mortar shall normally consist of Ordinary Portland Cement, sand and water in the proportions specified.

Mortar shall mix with thoroughly, either by hand or mechanically until its colour and consistency are uniform. It shall be mixed in small quantities only as and when required and shall normally be used within 45 minutes of mixing. Mortar which had been mixed for more than 1 hour and shows signs of hardening shall be discarded.

The constituent materials shall normally be volume proportioned as accurately as practicable making allowance for bulking of sand and also of the cement. Water shall be added in stages until the required consistency is reached.

903 CONCRETE ADMIXTURE

Concrete admixture as retarders, accelerators or as plasticizers shall be used with the prior approval of the Engineer only and they shall be used strictly in accordance with the manufacturer's recommendations. In the use of additives particular attention should be paid to the accurate proportioning of the additive and its homogeneous introduction in the mix.

904 SOILS

904.1 Filling Material

Soils used as filling materials shall be naturally occurring soils and shall not include highly plastic clay, silt, peat or other organic soils or any soil that is contaminated with top soil vegetable and other deleterious matter. The material used for the top 500 mm of filling shall conform to the requirements of Filling Type I material, and the material for lower layers of filling shall conform to the requirements of Filling Type II material as given below. Testing shall be carried out persua

Table 904-1: Material Characteristics for Filling - Type I and Type II

PROPERTY	TEST METHOD	SPECIFICATION LIMIT	
		FILLING TYPE I	FILLING TYPE II
Liquid Limit (LL) %	AASHTO T89	≤ 50	≤ 55
Plasticity Index (PI) %	AASHTO T90	≤ 25	≤ 25
Maximum Dry Density (MDD) (Modified proctor Test) kg/m^3	AASHTO T180	≥ 1,600	≥ 1,500

905 GEOTEXTILES / GEOFABRIC

905.1 Referenced Documents

These Specifications:

- Section 1003.1 Particle size Analysis of soils
- Section 1003.3 Determining the plastic limit and plasticity index of soils
- Section 1003.4 Moisture – Density Relations of soils using a 4.5 kg Rammer and 450 mm Drop

ASTM standards:

- D 123-00a, Standard terminology Relating to textiles
- D276, Test Methods for Identification of fibers in textiles
- D4354-99(04), Practice for Sampling of Coir for testing
- D4355-05, Test method for Deterioration of Geotextiles from exposure to Ultraviolet light and water (Xenon-Arc Type Apparatus)
- D4439 -04 Terminology for Coir
- D4491-99a (04), Test Method for water permeability of Geotextiles by permittivity.
- D 4533-04 Test method for trapezoid tearing strength of Geotextiles
- D4632-91(2003), Test method for grab breaking load and elongation of Geotextiles
- D4751-04, Test Method for determining apparent opening size of geotextiles
- D4759-2, practice for determining specification conformance of Coir
- D4833-00 Test Method for index puncture resistance of geotextiles, Geomembranes and related products
- D4873- 02, Guide for identification, storage and handling of geotextiles
- D 5261-92(03), Test method for measuring mass per unit area of geotextiles
- D 6140-00(05), Test method for determining the asphalt retention of paving fabrics

905.2 Physical Requirements

a) Fibers utilized in the manufacture of geotextiles and the threads used in joining geotextiles by sewing. Shall consist of long chain synthetic polymers, composed of at least 95 percent by weight of polyolefin or polyesters. They shall be formed into a stable network such that the filaments or yarns, including salvages, retain their dimensional stability relative to each other.

b) Subsurface drainage, separation stabilization and permanent erosion control applications, geotextiles conform to the physical requirements of sub section 905.6 .

c) All values of properties, with the exception of Apparent Opening Size (AOS), in these specifications represent Minimum Average Roll Values (MARV) in the weakest principal direction (i.e., average test results of any in a lot sampled for conformance or quality assurance testing shall meet or exceed the minimum values provided here in).Values for AOS represent maximum average roll values (MARV).

905.3 Certification

a) The contractor shall provide to the Engineer, a certificate stating the name of the manufacture, product name, and style number, chemical composition of the filaments or yarns, and other pertinent information to describe the geo-textile fully.

b) Contractor shall obtain the supplies of geotextiles from a manufacturer who shall be responsible for establishing and maintaining a quality control program to assure compliance with the requirements of the specifications. Documentation describing the quality control program shall be made available upon request from such manufactures.

c) Such manufacture's certificate shall state that the furnished geo-textile meets MARV requirements of the specification as evaluated under the manufacturer's quality control program. A person having legal authority to bind the manufacturer, shall attest to the certificate.

d) Either misrepresentation of materials or mislabeling shall be a reason to reject those geotextile products of the manufacturer.

905.4 Sampling, Testing and Acceptance

a) Geotextile materials shall be subject to sampling and testing to verify conformance with these Specifications. Sampling shall be in accordance with the most current ASTM standards D 4354, using the section titled, "procedure for sampling for purchaser's specification conformance testing". In the absence of purchaser's testing, verification may be based on manufacturer's certifications as a result of testing by the manufacturer of quality assurance samples obtained using the procedure for sampling for Manufacturer's Quality Assurance (MQA) testing. A lot size shall be considered to be the shipment quantity of the given product, or a truck load of the given product, whichever is smaller.

b) For the indicated application, testing shall be performed in accordance with the methods referenced in these specifications. The number of specimens to test per sample is specified by each test method. Geotextile product acceptance shall be based on ASTM D 4759. Product acceptance is determined by comparing the average test results of all specimens within a given sample to the specimen MARV. Reference shall be made to ASTM D 4759 for more details regarding geotextile procedures for acceptance.

905.5 Shipment and Storage

a) Labeling, shipment and storage of geotextile shall follow ASTM D 4873. Product label shall clearly show the manufacture or supplier name, style name and roll number. Each shipping document shall include a notation certifying that the material is in accordance with the certificate of the manufacturer.

b) Each roll of geotextiles shall be wrapped with a material that will protect the geotextile, including the ends of the roll, from damage due to shipment, water sunlight and contaminants. The protective wrapping shall be maintained during periods of shipment and storage subsequently.

c) During periods of storage, the geotextile rolls shall be elevated off the ground and adequately covered to protect them from the following: site construction damage, precipitation, extended ultraviolet radiation including sunlight, chemicals that are strong acids or strong bases, flames including welding sparks, temperatures in excess of 71 ^{0}C (1600F) and any other environmental condition that may damage the geotextile physical property.

905.6 Geotextile Property requirements for Subsurface Drainage and Horizontal Drains

Physical Characteristic – Should be Continuous filament, nonwoven needle punched. Polymer – 100% Polypropylene, UV stabilized.

Table 905-1: Physical and filtration properties of Geo-textiles

No	Code No.	Description	Property	Value
1.0	BS EN ISO 10319:2008	Geo-synthetics. Wide-width tensile test.	Tensile Strength Retention	Exceeds 70% Strength retention after 3 months outdoor weathering
			Tensile Strength (avg)	Exceeds 10 kN/m
2.0	BS EN ISO 11058:2010	Geo-textiles and geo-textile-related products. Determination of water permeability characteristics normal to the plane, without load.	Vertical Water Flow 50mm Head	More Than 80 $1/m^2/s$ (mm/s)
3.0	BS EN ISO 12956:2010	Geo-textiles and geo-textile-related products. Determination of the characteristic opening size.	Effective Opening size (O_{90})	Less Than 100 µm
4.0	BS EN ISO 12958:2010	Geo-textiles and geo-textile-related products. Determination of water flow capacity in their plane	20kPa	Exceeds 5.01/m.h
			200kPa	Exceeds 2.01/m.h
5.0	BS EN ISO 9863-1:2005	Geo-synthetics. Determination of thickness at specified pressures. Single layers.	Thickness 2kPa	Exceeds 1.5 mm
6.0	ASTM D 4491 – 99a (2009)	Standard Test Methods for Water Permeability of Geo-textile by Permittivity	Permittivity	More Than 2.5 s^{-1}
7.0	ASTM D 4751 - 04	Standard Test Methods for Determining g Apparent Opening Size of a Geo-textile	Apparent Opening Size (O_{90})	Less Than 250 µm

1000 TESTS FOR QUALITY CONTROL OF MATERIAL AND WORKS

1001 AGGREGATES AND SOIL

Table 1001-1: Quality Control Tests for Aggregates and Soil

Clause No	Quality Control Test	Reference Standards
1001.1	Sieve Analysis	BS EN 932-1-1997 or ASTM C 136-96a or AASHTO T27-99/ BS 812 Part 103.1
1001.2	Clay, silt and dust fraction (fraction passing the 0.075 mm sieve)	BS 812:103.2 (2000) or ASTM C 117-95 or AASHTO T11-97
1001.3	Aggregate Impact Value (AIV)	BS EN 1097-2:1998/ BS 812 Part 112
1001.6	Flakiness index	BS 812: Part 105.1:2000/ BS EN 933-3
	Elongation	BS 812: Part 105.2: 2000/ BS EN 933-4
1001.7	Specific Gravity of Coarse Aggregate	BS 812: Part 2:1975 or ASTM C 127-88 (1993) or AASHTO T85 – 91 (2000)
1001.8	Specific Gravity of Fine Aggregate	BS EN 1097: 5: 1999 or ASTM C 128-97 or BS 812: 2000 or AASHTO T84 – 00

1002 CEMENT AND CONCRETE

1002.1 Cement

Table 1002-1: Quality Control Tests for Cement

Clause No	Quality Control Test	Reference Standards
1002.1 (a)	Standard Consistency	SLS 107: 2008 or ASTM C 187-04 or BS EN 196-3: 2005 or AASHTO T129-01
1002.1 (b)	Setting Times	SLS 107: 2008 or ASTM C 191-04b or BS EN 196-3: 2008 or AASHTO T131-01
1002.1 (c)	Fineness	SLS 107: 2008 or ASTM C 204-00 or BS EN 196-6: 1992 or AASHTO T152-01
1002.1 (d)	Compressive Strength	SLS 107: 2008 or ASTM C 109/C109M-05 or BS EN 196-1: 2005 or AASHTO T106-02
1002.1 (e)	Soundness Test	BS 4550: Part 3: Sec 3.7 or BS EN 196-3: 2005

1002.2 Concrete

Table 1002-2: Quality Control Tests for Concrete

Clause No	Quality Control Test	Reference Standards
1002.3 (a)	Casting of Concrete Cubes	BS 1881: Part 108: 83, BS EN 12390-1:2000 or ASTM C31/C31M-03a in field or ASTM C192C/192M-05 in laboratory
1002.3 (b)	Testing of Concrete Cubes	BS EN 12390-3: 2002/BS 1881-116
1002.3 (g)	Slump Test	ASTM C143/C143M-05a or BS EN 12504-1-2000 or AASHTO T119-99/ BS 1881-102

1003 SOILS

Table 1003-1: Quality Control Tests for Soils

Clause No	Quality Control Test	Reference Standards
1003.1	Sieve Analysis Test	BS 1377-Part 2: 1990 or ASTM D422-63 (72) or AASHTO T88-00
1003.2	Liquid Limit	BS 1377-Part 2: 1990 or ASTM D 4318-05 or AASHTO T89-02
1003.3	Plastic Limit	BS 1377-Part 2: 1990 or ASTM D 4318-05 or AASHTO T90-00
1003.4	Modified Proctor Compaction	BS 1377-Part 4: 1990 or ASTM D 1557-02 or AASHTO T180-01
1003.6	Field Moisture	ASTM D 2218-98
1003.7	Field Density	BS 1377-Part 9: 1990 or ASTM D 1556-90 or AASHTO T191-02

1004 COATED METALLIC MESH

Table 1004-1: Quality Control Tests for Coated Metallic Mesh

Clause No	Quality Control Test	Reference Standards
1004.1	Tensile Strength of the Wire	EN 10218-1
1004.2	Diameter of the Wire	EN 10218-2
1004.3	Galvanize coating thickness	EN 10244-1 EN 10244-2

1100 GROUND ANCHORS

1101 GENERAL

This Specification sets out the requirements for the supply, assembly, installation, grouting, stressing and monitoring of post-tensioned ground anchors including drilling, grouting and water testing, and sealing of the boreholes. It applies to both temporary and permanent ground anchors with appropriate corrosion protection systems installed into soil or rock. It may also be applied to anchors which are stressed directly to ground and to unstressed or lightly stressed tie-downs which anchor structures to rock or soil through intervening unsound stratum.

Unless specified otherwise, such as for temporary anchors, tendons shall be fully encapsulated and placed in sheaths or ducts before insertion in the borehole. Carry out borehole grouting in a single stage operation, filling the borehole in such a manner that the hardened grout does not come in contact with the structure.

1102 DEFINITIONS

1102.1 General

The following definitions apply to this Specification:

Anchor Supervisor - Nominated employee of the Ground Anchor System Supplier approved by the Engineer responsible for supervision of Critical Anchor Activities and certification of installation operations.

Anchorage - The anchor component at the top of a tendon that transfers the tendon load to the ground or structure, comprising the pre-stressing head, bearing plate or anchorage casting, protective cover and all associated seals, fittings and materials (see Figure 1102-1).

Bleed - The separation of water from the grout paste.

Coupler - A device for joining lengths of bar or strand which comprise an anchor tendon.

Critical Anchor Activity - Construction activities including test anchors; anchor assembly; borehole drilling, cleaning and testing; anchor insertion, grouting and stressing; load testing; cutting off tendon and application of corrosion protection to anchorage and underhead zone.

Duct - A semi-rigid tube generally corrugated both inside and outside to isolate the tendon from the environment and to transfer load between the inner and outer grout annuli in the tendon bond length. Extensions may be either corrugated or smooth over the tendon unbonded length (see Figure 1102-1, Figure 1102-3, Figure 1102-4, Figure 1102-5 and Figure 1102-6).

Effective tendon free length - The length of tendon between the connection of the tendon to the stressing jack and a point along the tendon, which acts elastically during stressing. It is calculated from the load/extension characteristics of the ground anchor.

Fixed anchor length - The design length of borehole over which the load is transferred to the ground (see Figure 1102-1).

Free anchor length - The design length of borehole between the anchorage and the start of the bonded length along which no pre-stressing force is transferred to the ground (see Figure 1102-1).

Ground Anchor System Supplier - The Supplier, or agent of the Supplier, of the Engineer approved ground anchor system responsible for its supply and control, and for performance of its components.

Ground or rock anchor - An installation that is capable of transmitting an applied tensile load to a load bearing stratum of rock or soil, comprising an anchorage, free anchor length and fixed anchor length (see Figure 1102-1).

Grout - Cementitious material that transfers load from the tendon to the ground over the fixed anchor length; it may fill the remainder of the borehole and/or contribute to corrosion protection of the steel tendon.

Monitorable anchor - A ground anchor assembled and installed to allow inspection and measurement of anchor loads at some time after completion of stressing.

Multiple anchor - A single borehole containing multiple unit strands or bars with bonded lengths at staggered depths, to provide ultra-high load capacities in soils and weak rocks (see Figure 1102-4c).

Non-conforming anchor - A ground anchor system or its parts that do not conform to this Specification.

Nose cone - A component at the lower end of the anchor that retains and seals the end of the duct to assist insertion of the anchor into the borehole.

Overhead zone - The zone of the anchorage lying above the bearing plate and including the protective cap (see Figure 1102-2).

Permanent ground anchor - An installation that ensures the stability and satisfactory performance of the permanent structure or supported excavation for its design life, usually 100 years.

Pre-stressing head - A steel block with tapered holes and wedges capable of transferring the entire capacity of the tendon to the structure. Bars may use threaded nuts instead of wedges.

Proof anchor - A ground anchor on which a Proof Test is carried out prior to ground anchor work commencing at the Project Site.

Protective cap - A non-corroding sealed cap of galvanized steel or strong plastic containing a corrosion inhibiting compound that surrounds the pre-stressing wedges or nuts and tendon ends; it may be capable of being removed (see Figure 1102-2 and Figure 1102-3).

Re-stressable pre-stressing head - A pre-stressing head similar to a normal pre-stressing head that permits the tendon force to be measured by lift-off tests throughout the life of the structure. Small load losses of up to 20% of working load may be recovered by re-stressing and shimming or thread-turning.

Sheath - A generally smooth flexible tube which isolates each strand or bar and does not bond with the surrounding grout (see Figure 1102-1, Figure 1102-3, Figure 1102-4 and Figure 1102-5).

Spacer/centralizer - A corrosion proof component that supports the tendon or sheath/duct to ensure adequate grout cover.

Strand node - The controlled deformation of strand wires to form a tight “birdcage” to enhance the pull-out capacity of the tendon from the grout.

Suitability anchor - A ground anchor on which a Suitability Test is carried out prior to installation of the remaining ground anchors it represents.

Temporary ground anchor - An installation often used during the construction phase of a project to carry loads for a known short period of time, usually less than 2 years.

Tendon - That part of a ground anchor that transmits the tensile load from the fixed anchor length to the anchorage, typically comprising a bundle of identical strands or a single high tensile steel bar.

Tendon bond length - The length of tendon bonded directly to the grout capable of transmitting the ultimate tensile capacity of the tendon (see Figure 1102-3).

Tendon node - In multi-strand anchors the strands are spaced apart at tendon nodes and typically at 1 m to 2m away from these nodes the strands are banded tightly together; this enhances the bond between the tendon and the grout (see Figure 1102-1 and Figure 1102-3).

Tendon un-bonded length - The length of tendon between the pre-stressing head and the proximal end of the tendon bond length that is specifically isolated from direct contact with the grout (see Figure 1102-3).

Underhead zone - The zone of the anchorage lying between the pre-stressing head and the seal which overlaps the corrosion protection applied to the tendon free length (see Figure 1102-2).

Unit tendon - A tendon component of a multiple anchor that has its own pre-stressing wedge or nut, free length and bonded length. The bonded lengths of each Unit are located at a staggered depth in the borehole.

1102.2 Loads and Forces

Initial or Datum Load (T_A) - Initial load applied to the tendon prior to any testing.

Initial Residual Load (T_{RI}) - Measured load in the tendon immediately after lock-off assessed by a Lift-off Test.

Jacking Force (T_J) - The jacking force that produces the lock-off load, taking into account any anchorage friction and draw-in losses.

Lock-off Load (T_O) - The load required to be transferred to an anchor head immediately on completion of a stressing operation.

Minimum Breaking Load (T_U) - The product of the number of strands in an anchor and the characteristic minimum breaking load of the strand, or the minimum characteristic breaking load of a bar tendon.

Residual Load (T_R) - Measured load in the tendon after lock-off assessed by a Lift-off Test.

Test Load (T_P) - The maximum load to which a tendon is subjected during Suitability or Acceptance Tests

Working Load (T_D) - Residual load in the tendon after all losses that provides the required restraint to the structure.

1102.3 Tests

Acceptance Test - A single load cycle to Test Load TP to verify that each working ground anchor conforms to the anchor acceptance criteria.

Lift-off Test - Determination of the force in a tendon that causes a small lift of the anchor head away from the bearing plate, generally confirmed using a 0.5 mm thick feeler gauge

Proof Test - A load test carried out in advance of the installation of the working ground anchors to:

- Establish for the designer the anchor resistance Ra in relation to the ground conditions
- Allow the designer to determine criteria for anchor acceptance
- Verify the performance of proposed materials and components e.g. ducts
- Prove the competence of the Contractor
- Determine the bond capacity of an anchor by inducing a failure at the grout/ground interface.

Suitability Test - At least six load cycles followed by lock-off to verify the rock anchor design and installation and to establish reference test values for other anchors represented by the tested anchor.

1102.4 Notation

A_t = Cross-sectional area of tendon (mm²)

E_t = Modulus of elasticity of tendon (MPa)

L_b = Bond length (mm)

L_{ef} = Effective free length (mm)

L_{fr} = Free length (mm)

R_a = Anchor resistance calculated in accordance with AS 5100.3

S* = Design action loads calculated in accordance with AS 5100.3

T = Anchor load (kN)

T_A = Initial Datum Load (kN)

T_J = Jacking Force (kN)

T_O = Lock-off Load (kN)

T_P = Test Load (kN)

T_R = Residual Load (kN)

T_{RI} = Initial Residual Load (kN)

T_U = Minimum Breaking Load of tendon (kN)

dL = Measured total extension of tendon relative to a datum (mm)

δL_e = Measured elastic extension of tendon at each load stage (mm)

δL_r = Calculated elastic extension of tendon at each test load stage (mm)

δL_{pl} = Measured plastic or non-recoverable extension of tendon at each test load stage (mm)

$ø_g$ = Geotechnical reduction factor selected in accordance with AS 5100.3

$ø_n$ = Importance category reduction factor selected in accordance with AS 5100.3

1102.5 Figures

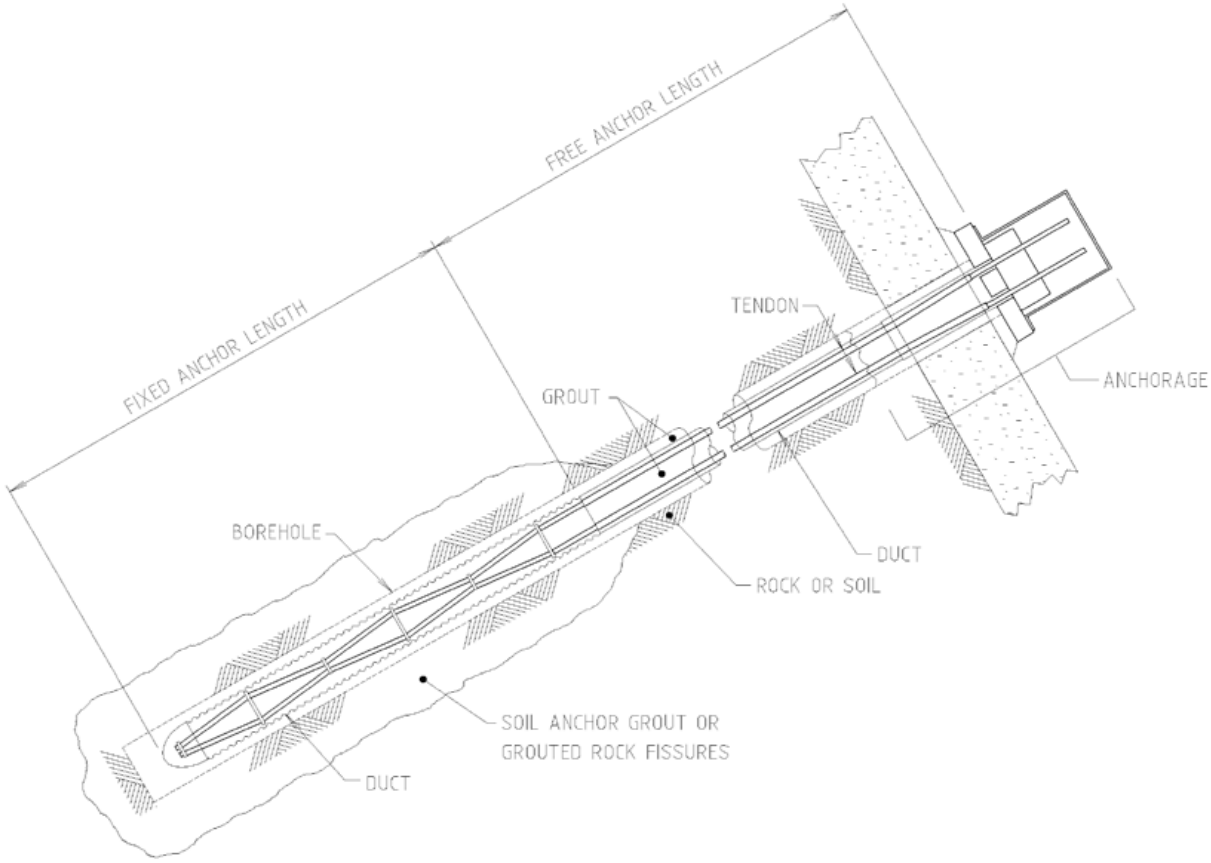

Figure 1102-1: Ground Anchor Nomenclature

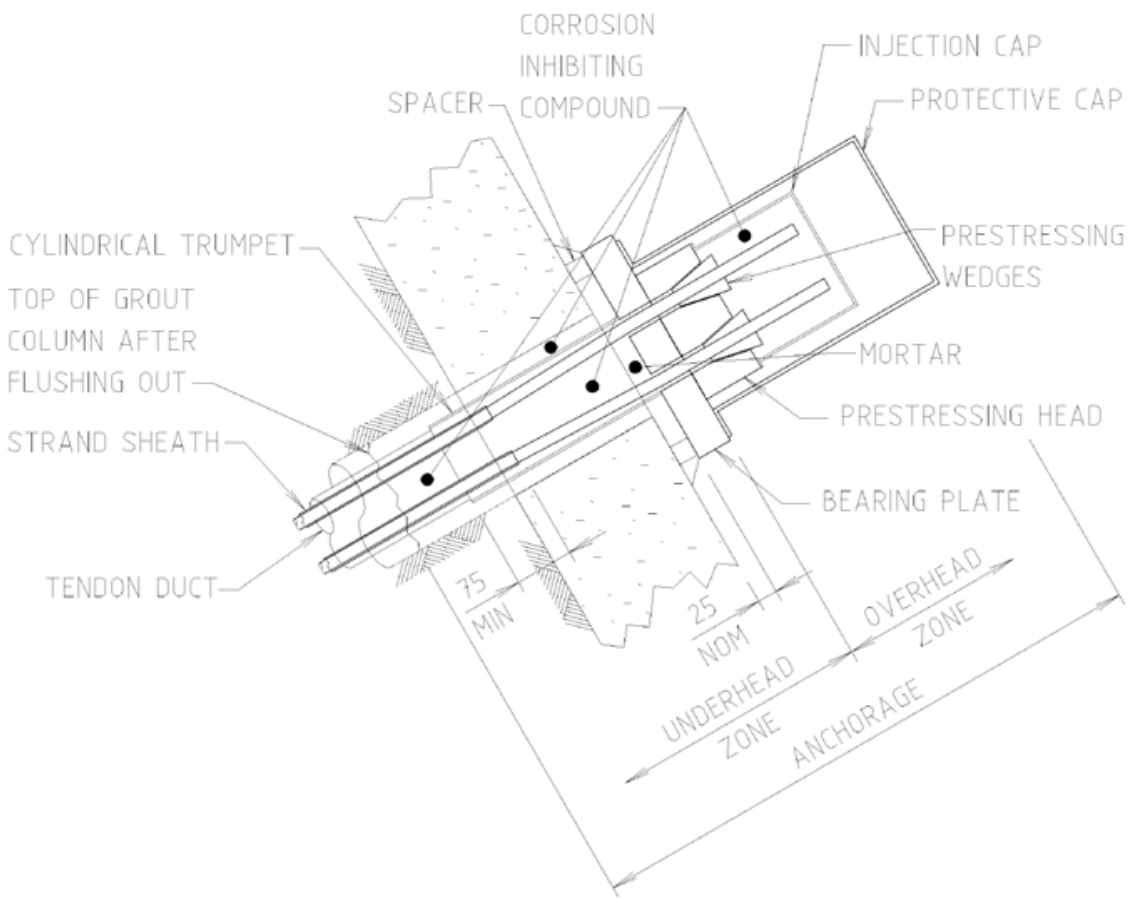

Figure 1102-2: Monitorable Permanent Anchorage

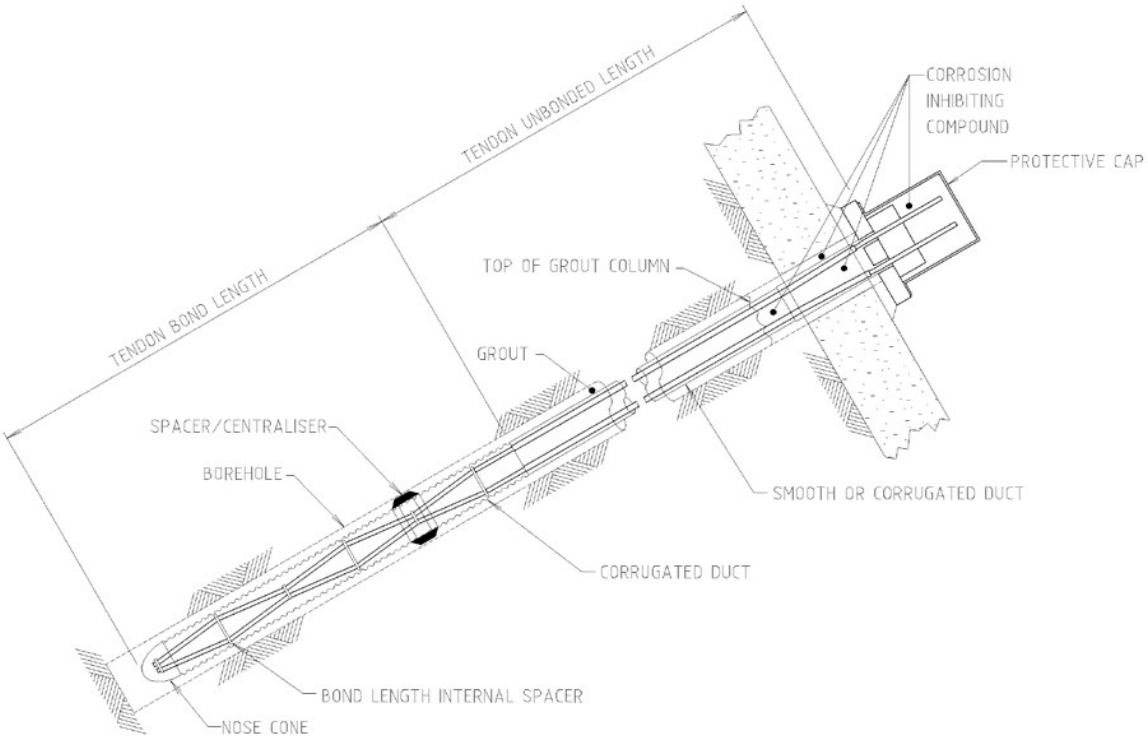

Figure 1102-3: Tendon Nomenclature

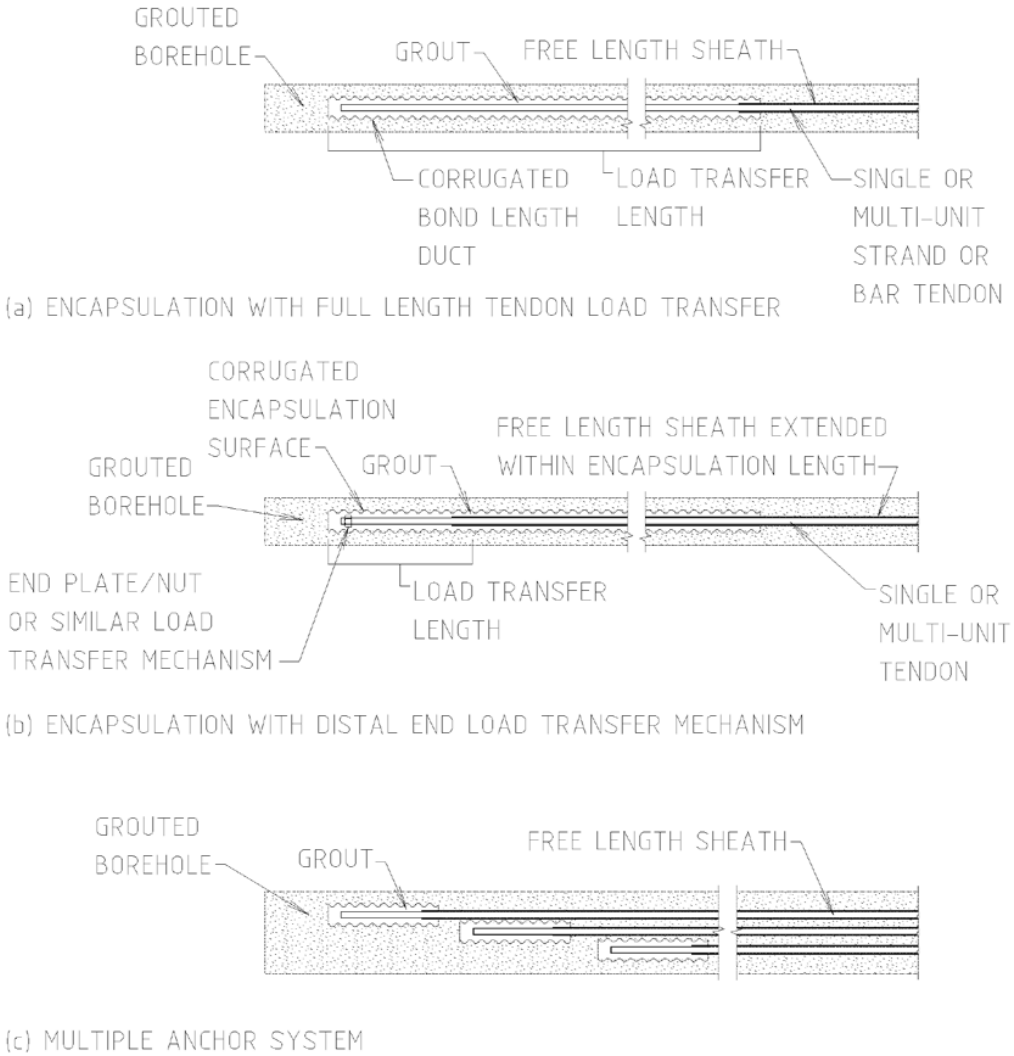

Figure 1102-4: Typical Factory Grouted Tendon Bond Lengths

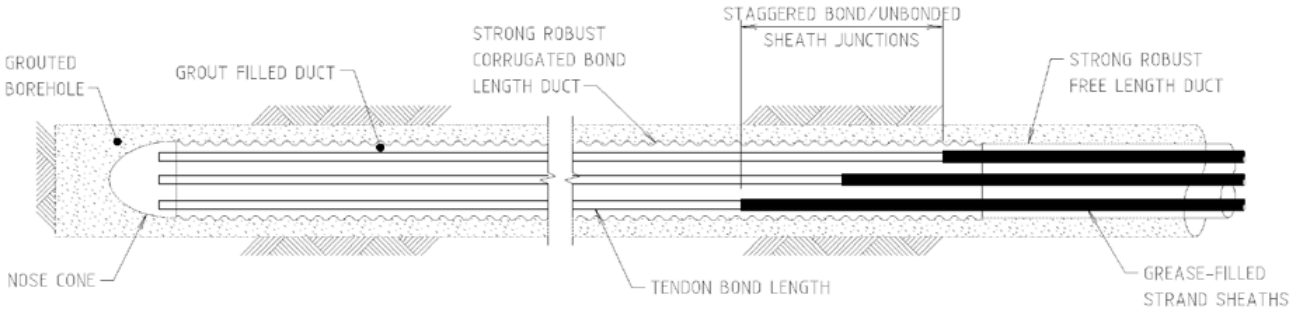

Figure 1102-5: Grouted In-situ Tendon Bond Length

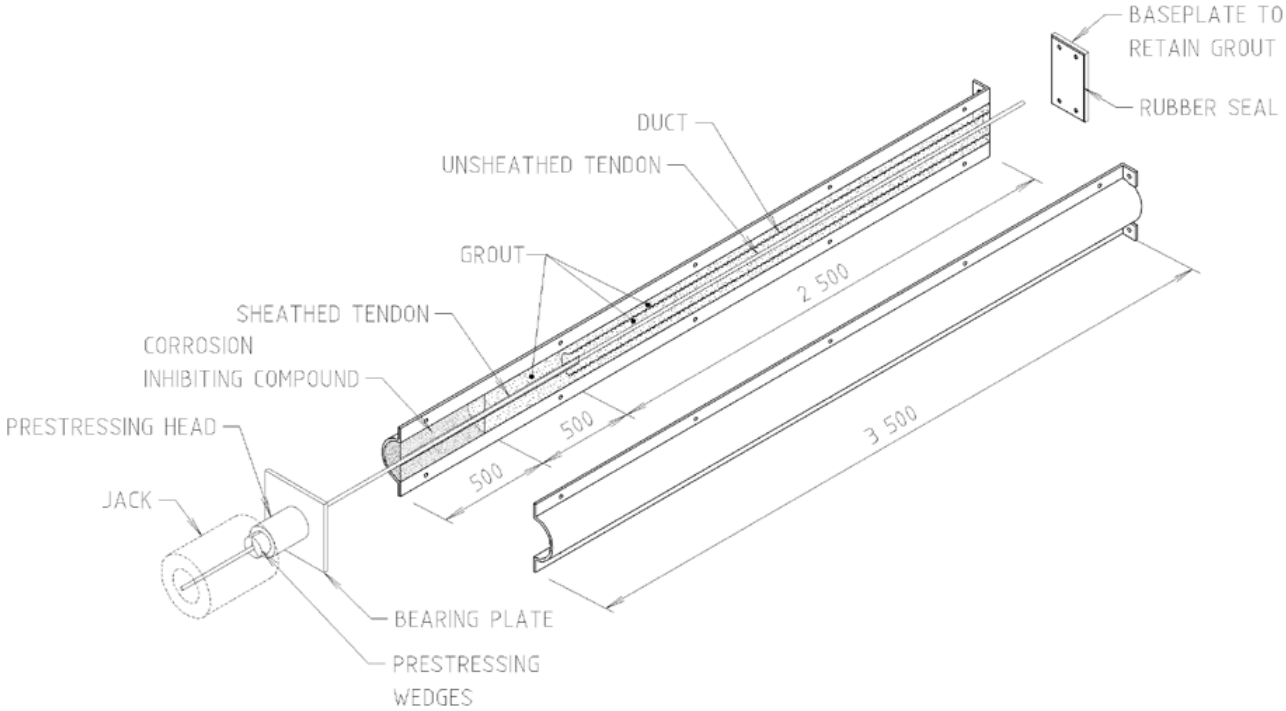

Figure 1102-6: Split Gun-Barrel Test Arrangement

1103 MATERIALS AND COMPONENTS

1103.1 General

Obtain materials only from suppliers that have implemented quality management systems to ISO 9001, with third-party certification.

Provide evidence demonstrating that each supplier of pre-stressing components and tendons has the specified quality management systems in place, and prove the conformity of the supplied materials with the requirements of this Specification.

1103.2 Tendons

Obtain pre-stressing materials only from suppliers that have implemented quality management systems to ISO 9001, with third-party certification accredited.

Provide evidence demonstrating that each supplier of pre-stressing materials has the specified quality management systems in place, and provide proof of conformity of the supplied materials with the requirements of this Specification.

Tendons shall conform to AS/NZS 4672.1 or equivalent. If tendons conform to standards other than AS/NZS 4672 or equivalent, provide to the Project Verifier evidence that the tendons are of equivalent quality.

Strand shall be Relaxation Class 2 unless specified otherwise.

Provide, with each delivery, documentation listing the Lot numbers from which each coil or bar is taken and test certificates conformity with AS/NZS 4672 or equivalent. Testing shall conform to AS/NZS 4672.2 or equivalent.

Test at least one sample from each coil of wire and strand. Test at least 3 bars from each Lot and each delivery. Submit the following test reports prior to use at site for the Engineer's approval.

(a) Breaking force;
(b) Yield strength and elongation;
(c) Load-elongation curve;
(d) Cast analysis of the steel;
(e) Cross-sectional area of tendon; and
(f) 1000 hour isothermal relaxation, with evidence that the tendon tested represents the tendons supplied. The tendon bond length shall be not less than 3 m.

1103.3 Anchorages

Anchorages shall conform to AS 1314 or equivalent accepted by the Engineer.

Submit for all anchorage components certification prior to use at site for the Engineer's approval.

Anchorage components shall be of adequate size and shape to safely transfer the force from the tendon to the concrete without overstress, either directly through the anchor head or indirectly through a chair under the stressing jack.

Bearing plates shall be Grade 250 steel to AS/NZS 3678 or equivalent accepted by the Engineer. Higher strength steels shall be used, provided that evidence is submitted demonstrating an adequate factor of safety.

Bearing plates for anchors stressed directly to rock shall be the size shown on the Design Drawings, dimensioned to transfer tendon forces uniformly without overstressing the rock or the bearing plate.

Bearing plates shall not fully covered with concrete and isolated from the environment; those bearing plates hot-dip galvanize in conformance with requirements of AS 1214 and AS 1650 with minimum coat thickness of 85 µm or 610 mg per square meter.

The bearing stress at the steel contact surfaces shall not exceed 400 MPa.

The bearing stress at the concrete surface shall not exceed 30 MPa.

Submit calculations or other evidence from the supplier of the ground anchor system substantiating the design of the bearing plates supplied for the Project Works.

Manufacturing tolerances for each component shall not impair the gripping efficiency of the assembled anchorage.

Provide a device to centre the anchorage so that the tendon force is applied uniformly to the contact surface between the pre-stressing head and the bearing plate or anchorage casting.

The pre-stressing head shall permit the monitoring of accurate extension measurements without indeterminate losses between loading increments.

Draw-in losses associated with the wedges shall be uniform and allow presentation of draw-in versus load plots where appropriate.

Incorporate injection nipple/s for the Corrosion Inhibiting Compound (CIC) to fill and pressurise cavities above and around the pre-stressing head.

When stressing the anchorage directly against the rock, include in the quality plan the proposed criteria for a satisfactory rock surface and procedures for installing the bearing plate on its pad.

For guidelines to good practice in the design of rock and soil anchors with reference to site investigation data see:

(a) British Standard Code of Practice for Ground Anchorages BS8081 published by the British Standards Institute
(b) Geotechnical Engineering Handbook Volume 2 Procedures – Chapter 2.5 Ground Anchors published by Ernst & Sohn 2003.

1103.4 Grout

Fine aggregate if used, shall have maximum nominal size of 1.0 mm and conform to AS 2758.1 for normal weight, concrete exposure classification B2, and maximum water absorption of 2.0%.

Mixing water shall be clean and free of oil, acid, alkali, organic or vegetable matter, not be harmful to steel or grout, and have a chloride ion content less than 500 mg/l.

Methocell, ligno-sulphonate based superplasticisers and aluminates shall not be used as admixtures. Expansive admixtures where used shall be the pre-hardening type and not include iron or aluminium powders. The chemical reactions between grout constituents or materials in contact with the grout shall not produce gases.

Grout mixes shall be pre-packaged so that only water and admixtures need to be added to the dry mix on-site, or mixes shall be designed to meet project specifications for site batching.

1103.5 Sheaths and Ducts

Individual strand sheaths and tendon anchor ducts shall be robust, abrasion and corrosion resistant, waterproof, non-biodegradable and sufficiently flexible to allow insertion of the anchor into the borehole without damage. They shall be strong and provide enough support to prevent excessive deformation or rupture under loads imposed during anchor installation and grouting.

Maintain and check the integrity of the sheaths and ducts during assembly, installation, grouting and testing.

a. Strand/Bar Sheaths

Provide for both temporary and permanent anchors:

(a) A strong smooth plastic sheath closely surrounding the steel strand/bar over the un-bonded length of the tendon; and
(b) A corrosion inhibiting grease or lubricant conforming to Section 1103.6 completely filling the annulus between the strand/bar and the sheath such that during anchor stressing operations the frictional forces over the un-bonded length of the tendon are minimized.

b. Tendon Un-bonded Length Ducts

Ducts for the tendon un-bonded length shall be smooth or corrugated and shall be one of the following:

(a) HDPE conforming to ASTM D1248
(b) PP conforming to ASTM D4101

c. Bond Length Ducts

Ducts for the bonded length shall be corrugated and shall be HDPE conforming to ASTM D3350.

Corrugations shall be uniform and generally sinusoidal in shape, conforming to the following:

(a) Wall thickness (w) of ducts: $w \geq 2$ mm
(b) Pitch of corrugations (p): $12\ w \geq p \geq 6\ w$
(c) Amplitude of corrugations (a): $a \geq 3\ w$

The profile shall not allow voids to be formed in the rising grout column.

The base of the duct shall be sealed and contain a nose cone to assist insertion into the borehole. The nose cone shall not inhibit grouting of the tendon and shall be robust and corrosion resistant.

Demonstrate using Proof Tests the capability of the duct to:

(i) Provide adequate bond capacity between the inner grout annulus and the tendon equal to the tensile capacity of the tendon
(ii) Provide adequate bond capacity between the duct and the outer grout annulus equal to the tensile capacity of the tendon
(iii) Accommodate the elastic behaviour of the tendon
(iv) Satisfy other anchor acceptance criteria.

1103.6 Corrosion Inhibiting Compound (CIC)

The Corrosion Inhibiting Compound (CIC) used for the sheaths of individual strands or bars and corrosion protection of the underhead and overhead zones of the anchor shall be a chemically stable, non-reactive grease or wax compatible with tendons, sheaths and grout conforming to Table 1103-1.

Table 1103-1: Performance Criteria for Grease/Wax Corrosion Inhibiting Compound

Property	Grease		Wax		Comments
	Test Method	Requirements	Test Method	Requirements	
Consistency	ASTM D217	265 – 295 mm	ASTM D937	150 – 350 mm	Pumpability & application compatibility to be confirmed
Corrosion protection	ASTM D1743	Pass	ASTM D1743	Pass	Test substrate to be vertical 7-wire pre-stressing strand
Copper corrosiveness	ASTM D4048	1a	ASTM D130	1a	
Salt spray corrosion	ASTM B117	1000 h	ASTM B117	1000 h	
Oil separation maximum	ASTM D1742	3 %	ASTM D6184	0.5 % at 38 ºC	Test temp for wax is 38 ºC
Drop point minimum	ASTM D566	150 ºC	ASTM D127	65 ºC	Test temp for wax is 38 ºC
Flash point minimum	ASTM D92	200 ºC	ASTM D92	200 ºC	
Evaporation maximum	ASTM D972	0.5%	ASTM D972	0.5 % at 38 ºC	
Saponification	ASTM D94	< 2 mg KOH/gm	ASTM D94	< 2 mg KOH/gm	
Water washout	ASTM D1264	< 5% at 38 ºC	ASTM D1264	0.5 % at 38 ºC	

1103.7 Protective Caps

Provide protective caps that are watertight, allow complete draining and refilling of the CIC and cover the pre-stressing head and protruding tendon ends in accordance with Section 1110 . Caps also shall allow visual inspection of the CIC level using a watertight inspection lid without removal of the cap.

Unless otherwise approved, the protective cap and inspection lid shall be minimum 7 mm thick steel hot-dipped galvanized to AS 1214 and AS 1650 with minimum coat thickness of 85 µm or 610 mg per square meter.

Where the anchorage is fully isolated from the environment by a thick dense cover of concrete not subject to cracking through the life time of the permanent anchor and noted on the Design Drawings, then protective caps may be omitted.

1104 CORROSION PROTECTION

1104.1 General

The design life of permanent anchors conforming to this Specification is 100 years in typical aggressive environments.

Where doubt exists with regard to the corrosion protection performance of a ground anchor system in a specific environment, provide supplementary additional protection.

Take measures to eliminate corrosion and loss of capacity of the load carrying elements of the ground anchor over the anchor's design life.

Provide corrosion protection by containing the steel elements of the tendon within anchor sheaths and ducts over the entire length within the ground or structure. In the fixed anchor length, supplement the isolation provided by the duct with an outer annulus of cementitious grout not less than 20 mm thick; this grout shall not be considered

as providing corrosion protection as the grout may crack during stressing. In the free anchor length, supplement this isolation with corrosion inhibiting wax or grease compounds, which are an integral part of the ground anchor's corrosion protection system.

1104.2 Underhead Zone Protection

The length of tendon between the top of the CIC filled sheath and the base of the pre-stressing head is particularly vulnerable to corrosion, and on completion of stressing it is rarely possible to inspect the effectiveness of the protection provided. Special precautions for corrosion protection of this zone are specified in this Specification. Refer also to BS 8081 for guidance to good ground anchor corrosion protection practice.

Provide a steel duct or trumpet around the tendon in this zone that contains either the CIC or a resinous grout, both of which shall be fully contained to prevent leakage.

1104.3 Temporary Anchors

Unless environmental conditions are particularly aggressive, cementitious grout alone is appropriate corrosion protection for tendons of temporary anchors with a design life of up to two years in a non-aggressive environment, provided the tendons are spaced, centralised and have a grout cover of not less than 20 mm.

1105 SUPPLY AND SUPERVISION

1105.1 General

Supply and install each ground anchor at the specified location and alignment in accordance with the Design Drawings and this Specification using a tendon with the specified minimum breaking load and minimum bond length pre-stressed to achieve the specified Lock-off Load (T_O).

1105.2 Anchor Supervisor

Critical Anchor Activities shall be carried out under the supervision of the Anchor Supervisor. Critical Anchor Activities include:

(a) Borehole drilling, cleaning and testing (Section 1107)
(b) Insertion of each anchor into the borehole (Sub Section 1107.5 a.)
(c) Grouting (Section 1108.1)
(d) Load testing (Section 1109.1)
(e) Stressing (Section 1110.1)
(f) Cutting off tendon and applying corrosion protection to the anchorage and underhead zone (Section 1111).

The Anchor Supervisor shall certify that the following items conform to this Specification:

(i) Information to be supplied

The following documents are a summary of documents that shall be included in the quality plan. The requirements of this Specification and others included in the deed shall be reviewed to determine additional documentation requirements.

The information to be submitted as part of the quality plan includes, but is not limited to, the following:

(a) Full details proving conformity with the Specification of alternative corrosion protection systems to that specified (Section 1101)
(b) Criteria for a satisfactory rock surface and procedures for installing the bearing plate on its pad when stressing anchorages directly against rock (Section 1103.3)
(c) Details of supplementary additional corrosion protection required in a specific environment (Section 1104.1)
(d) Details of method of sealing base and head of underhead zone duct or trumpet (Section 1104.2)
(e) Fully detailed drawings including cross-sections and longitudinal sections showing all ground anchor components, method of assembly and provisions for monitoring (Section 1106.1)
(f) Procedure for preventing tendon strands from crossing within the free length (Section 1106.2)
(g) Demonstration of adequacy of joints in sheaths and ducts (Section 1106.5)
(h) Details of sheaths at tendon couplers (Section 1106.6)

(i) Detailed procedures for fixing lower end of tendon to the bottom of corrugated duct and sealing with nose cone (Section 1106.7)

(j) Full details of proposed drilling procedure and method of supporting the borehole during drilling, installation and grouting when penetrating material other than rock (Section 1107.1)

(k) Procedures for maintaining and checking the specified borehole alignment and deviation from straight during drilling (Section 1107.2)

(l) Procedure for dealing with variations in subsoil condition when drilling boreholes (Section 1107.2)

(m) Methods of cleaning the boreholes (Section 1107.3)

(n) Procedures for inserting assembled anchors into boreholes (Section 1107.5 a.)

(ii) Each tendon coil or bar (Section 1103.2)

(iii) Ground anchor system (Section 1103.3)

(iv) Grout (Section 1103.4)

(v) Tendons sheaths, anchor sheaths and ducts (Section 1103.5)

(vi) Corrosion inhibiting compound (Section 1103.6)

(vii) Assembled anchor (Section 1106)

(viii) Borehole drilling, cleaning and testing (Section 1107)

(ix) Anchor insertion and water testing (Section 1107.5)

(x) Experience and qualifications of all grouting personnel (Section 1108.1)

(xi) Grouting (Section 1108)

(xii) Stressing (Section 1110)

(xiii) Assessment of anchors (Section 1109)

(xiv) Application of corrosion protection to underhead zone and protective cap (Section 1111)

(xv) Monitoring (Section 1112)

1106 ASSEMBLY

1106.1 General

For all ground anchor assemblies, submit your comprehensive proposals for the complete assembly to prevent damage to the anchor components and corrosion protection system during handling.

Include in the quality plan fully detailed proposals, with drawings including cross-sections and longitudinal sections showing all anchor components, including details of the method of assembly and if applicable the provisions for monitoring specified in Section 1112 .

Anchors shall not assemble outside the Project Site. Maintain an assembly schedule tracing the source of each tendon in each anchor e.g. for strand, each coil from which each strand in each anchor was taken.

Prior to commencement, or during the early stages in the anchor works, demonstrate the duct's resistance to damage during installation by inserting and withdrawing an assembled anchor from the borehole and inspecting its condition.

Consideration shall be given to systems developed to confirm the total isolation of the tendon from the environment using electrical conductivity test techniques.

Provide for a minimum of 20 mm grout thickness between the sheath/duct and the borehole wall.

1106.2 Tendons

Supply strands in coils in conformity with AS/NZS 4672 or equivalent. When removing strands from coils the resulting twisting forces shall not loosen the lay of the strand. The lay of the strand wires may only be modified with the intent of forming strand nodes.

Reject any damaged or kinked tendons.

Do not carry out welding at a distance less than 3 m from any tendons. Reject any tendon affected by arc strikes.

Cut tendons with high-speed carborundum disk cutters. Do not use flame cutting under any circumstances.

Arrange tendons uniformly without oblique crossing over the anchor cross-section. Include in the quality plan a procedure for avoiding severe crossing of strands within the tendon un-bonded length.

1106.3 Grout Tubes

Provide for each anchor, a minimum of two independent grout tubes in each annulus extending to the bottom of the anchor that, if left in place, shall not reduce the bond between the tendon and the grout.

Grout tubes shall be appropriate for the volume of grout and size of anchor with a minimum internal diameter of 16 mm and sufficient wall thickness and strength to prevent damage during handling, installation and grouting.

Assemble tendons so that any external grout tubes shall not be damaged during installation and the specified grout thickness between the sheaths and duct and the sides of the borehole shall be provided.

Arrange grout tubes, spacers and centralisers so that grout shall flow freely to provide complete grout cover around all anchor components, without entrapping pockets of grout, bleed water or air. Provide 300 mm above the bottom of the grout supply tube additional cut-outs, to minimise blockages.

1106.4 Spacers and Centralisers

Provide internal spacers to centralise the tendon and provide the required cover.

Provide spacers at 1 m intervals in the bonded length and 3 m intervals in the unbonded length between the duct and the borehole wall to ensure complete filling of the outer annulus with grout of the minimum specified thickness and to prevent damage.

Manufacture centralisers and spacers from materials that can withstand installation forces without damage and that shall not corrode or damage the anchor components.

External spacers shall be sized and spaced to protect external grout tubes from being damaged.

Do not use grout tubes as spacers.

1106.5 Joints

Where a corrugated duct joins with a smooth duct above the tendon bond length, make the joint sufficiently strong enough to withstand installation and unbalanced water and grout pressures.

Provide joints at the top and bottom of the corrugated duct, to the smooth free length and to the nose cone respectively that are strong, watertight and able to withstand loads from all anchor operations without damage.

Joints between lengths of sheaths and ducts shall be made using hot plate welding by experienced operators, unless approved otherwise. Demonstrate the adequacy of the welds or alternative joints. Include sampling and testing of field joints in the Inspection and Test Plan and the Proof Tests (refer Section 1109.3).

1106.6 Un-bonded Length

Overlap the duct with the corrosion protection at both the connection with the tendon bond length and with the underhead zone.

Where the use of coupler(s) within the tendon un-bonded length cannot be avoided, then surround the strand or bar coupler with a coupler isolation sheath of sufficient length of equal or better performance than the remainder of the un-bonded length sheath that allows the coupler to move freely within the surrounding grouted annulus during cyclic loading of the anchor without damage to the integrity of the un-bonded length.

Pay close attention to the coupler isolation during sheath fusion welding or use bonded heat shrink systems for watertight overlaps. Since the diameter of the coupler isolation sheath is generally greater than that of the remaining un-bonded length sheath, use sheaths which accommodate strand/bar and coupler movement, maintain integrity and avoid damage to the un-bonded length, and demonstrate satisfactory performance if required using Proof Tests.

1106.7 Bond Length

Provide a nominal minimum 5 mm space between adjacent strands of multi-strand tendons at bond length internal spacers for complete grout penetration. Provide similar grout cover to bar couplers.

At the midpoint between bond length internal spacers, provide minimum 20 mm grout cover between the strands and the duct wall.

Centralise bar tendons within the duct to provide a minimum 20 mm grout annulus.

Where transition lengths are used, stagger the joints between each un-bonded length and bond length to avoid abrupt changes in the load transfer mechanism.

Fix the lower end of the tendon to the bottom of the corrugated duct and seal it using a nose cone in accordance with Sub Section 1103.5 c. ; provide detailed procedures for this in the quality plan.

1106.8 Marking

Clearly mark the upper ends of tendons and sheaths with reference marks prior to installation and provide in the assembly schedule for each anchor details of the following lengths in metres from the reference marks to an accuracy of 0.10 m:

(a) Depth of borehole
(b) Location of reference marks
(c) Ends of tendon, duct and sheath
(d) Start of bond length duct
(e) End of bond length duct
(f) Start of de-bonding for each individual strand or bar
(g) End of de-bonding for each individual strand or bar
(h) End of each grout tube

1106.9 Conformity Records

Obtain shop drawings and conformity records for each type of anchor, including tendon materials and anchorage components and the assembly schedule at least five (5) days before the proposed date of installation.

1107 INSTALLATION

1107.1 General

When anchoring new concrete structures, install the anchor through formed holes constructed to the tolerances shown on the Design Drawings, unless otherwise specified.

When anchoring existing concrete structures, drill holes in the structure using diamond core drills or the like to a tolerance of –0, +25 mm on the diameter, unless specified otherwise. Do not use percussion hammer or impact type drills or the like.

During borehole drilling, cleaning, testing, tendon installation and grouting, ensure that:

(a) the complete tendon bond length is in ground of the specified quality and strength
(b) the complete tendon bond length is filled with grout of the same quality as that pumped to the borehole
(c) the grout does not become diluted by ingress of water into the tendon bond length
(d) the grout does not leak from the borehole prior to setting
(e) the tendons are grouted to the surface then flushed back to a depth to allow for the necessary strand pattern divergence
(f) When required, the grout is not in contact with the back of the anchored structure until after completion of stressing because the free length grout column in compression can behave like a strut on the back of the structure; provide packers to prevent this if necessary.

When penetrating material other than rock, provide full details in the quality plan of the proposed drilling procedure and method of supporting the borehole during drilling, installation and grouting.

1107.2 Drilling

Drill boreholes at the locations and to the minimum diameter shown on the Design Drawings, providing for the minimum grout thicknesses specified in Section 1106.1 . Do not use diamond core drilling for the borehole in the tendon bond length, as the sides of the hole shall be rough for bond.

Drill boreholes at least to the depths specified on the Design Drawings. Provide an extra length as required by the tendon size with a minimum of 500 mm below the tendon bond length for deposition of cuttings that cannot be flushed out.

Use a rigid drilling rig assembly and working platform to achieve the specified borehole alignment. Check the positioning of the rig regularly during drilling to maintain the specified alignment. Use rigid, large diameter drill rods and associated casings to minimise borehole deviations resulting from obstructions or inclined bedding planes.

Boreholes shall comply with the following:

(a) Deviation from alignment shall not exceed 1 in 20
(b) Deviation from straight shall not exceed 20 mm in any 3 m length
(c) Entry point shall be positioned within a tolerance of ±75 mm for retaining walls and of ±100 mm for structures
(d) Initial alignment when setting up the drilling rig shall not deviate by more than 2° from the specified axis of the borehole.

Conform to borehole tolerances to avoid difficult homing, undesirable friction during stressing and interaction between bonded anchors. Use suitable equipment to facilitate measurement of borehole deviation. Include in the quality plan procedures for maintaining and checking the specified alignment and deviation from straight.

Conform to the angular tolerances or better to reduce interaction between tendon bond lengths, particularly where the anchorages are in close proximity and/or anchors are long.

In ground likely to collapse, use temporary or permanent lining tubes or steel casings to support the sides of the tendon bond length of the borehole. Provide in the quality plan, methods of dealing with variations in subsoil condition.

1107.3 Cleaning

On completion of drilling or reaming, clean and then seal the boreholes to prevent contamination.

Carry out cleaning by flushing the borehole at least three (3) times with water and air until the emerging water is clear, to remove all smearing and drill cuttings from the borehole walls and bottom.

1107.4 Borehole Testing

Testing of boreholes is a Critical Anchor Activity that shall be carried out under the supervision of the Anchor Supervisor.

Borehole testing is carried out to ensure that during grouting uncontrolled grout leakage does not take place and on completion of grouting the bond length is fully grouted.

Borehole testing shall be carried out in conformity with Sub Sections 1107.4 a. or 1107.4 b. or 1107.4 c. or a combination of the Sub Sections.

Apply the tests over the bond length of the anchor. Apply the tests over the free length also, if required by the Engineer.

a. Pressure Grouting

Pressure grouting is particularly suited to anchors founded in weak or fissured rocks and soils.

Grout the borehole under a pressure of 1 MPa, reduced as necessary to remove the drill casing from the fixed length.

During grouting, check the efficiency of the grouting by monitoring the response of the ground to further grout injection and restore the grout pressure quickly if it falls by injecting more grout.

If the grout pressure cannot be maintained, re-drill the borehole after the grout sets.

If required, isolate the borehole length to be tested and control the withdrawal of lining tubes or use a packer or tube-a-manchette system.

During pressure grouting of fully cased boreholes where casings are progressively removed, such as for anchors in soil, maintain the casing rotation during the application of the pressure.

b. Falling Head Grout Test

When pressure grouting is not carried out as part of routine anchor construction, the borehole may be filled with grout prior to insertion of the tendon and the grout level observed until it becomes steady.

If the grout level falls, top it up with more grout and after sufficient stiffening of the grout, re-drill and re-test the borehole.

c. Water Testing

Subject the borehole to a water test to determine the likelihood of grout loss over the anchor length. Borehole packers may be used to seal off the length of borehole under test, or fill the complete borehole with water and test.

Test by applying a net pressure of 100 kPa and maintain this pressure for at least ten (10) minutes with a water loss in this period of not more than 50 litres. The net pressure is the difference between the applied pressure and the pressure in the borehole.

If the water loss exceeds 50 litres in ten minutes, grout the bond length, re-drill the borehole and test again. Should the test again fail, repeat the process.

If, after two grouting operations the water test fails, but no grout loss occurred during the second grouting operation, the borehole may be accepted and no further attempt to waterproof the borehole is needed. Where a grout loss occurs during the second grouting operation, give consideration to multistage grouting and/or use of sanded mixes, or abandon the borehole for use for drainage or filling with grout.

If any water outflow occurs from the collar into the borehole, waterproof and water test the borehole as above. If, after two successive grouting operations, outflow of water from the collar continues, implement a means of providing sufficient backpressure to stop the outflow of water during grouting of the anchor.

d. Conformity Records

Obtain conformity records for the borehole prior to inserting the anchor.

1107.5 Anchor Insertion

a. General

Insertion of each anchor into the borehole shall be carried out under the supervision of the Engineer.

The Engineer and the Anchor Supervisor shall inspect the anchor assemblies prior to insertion and certify the integrity of the sheaths, duct, tendon and grouting tubes.

Give at least one working day's notice prior to inserting each anchor. Submit insertion procedures as part of the quality plan.

b. Insertion of Permanent Anchor Tendons Grouted In-situ

Keep each borehole sealed until the assembled anchor is ready to be inserted.

Before inserting the anchor, clean the walls and bottom of the borehole in accordance with Section 1107.3 and gauge it to confirm that it is unobstructed and of the required diameter over its full depth.

Just prior to inserting the anchor, completely fill the borehole with water.

The use of a removable funnel with a rounded entrance at the collar of the borehole or at the casing head during tendon insertion should eliminate damage to the duct and external spacers during insertion.

Fill the duct with water as it is lowered into the water-filled borehole to assist its insertion and to minimise differential water pressure.

Control the descent of the anchor using a braking device. Suspend the anchor during and after insertion so that it is not compressed or displaced from the centre of the borehole.

Control the curvature of the anchor during insertion to prevent kinking or crumpling of the sheaths and duct.

Test the integrity of the grout tubes by pumping water through each tube.

Take measures immediately after anchor insertion to protect the borehole from contamination e.g. from waste grout, that could adversely affect subsequent grouting.

c. Water Testing of Inserted Anchor

After insertion or immediately prior to grouting, water test to demonstrate the integrity of the corrosion protection system of the assembled anchor by topping up with water and extracting water from the outer annulus. Provide a differential water head between the inner and outer annulus of at least two (2) m for at least thirty (30) minutes. If any leakage occurs, withdraw the anchor from the borehole, repair or replace it and water test again until it is watertight.

1108 GROUTING

1108.1 General

All personnel involved in grouting shall be acceptable to the Engineer and the Anchor Supervisor and have relevant training and experience or be subject to supervision that shall produce conforming grout.

Commence grouting immediately after approval of insertion of the anchor. This time delay should not exceed 12 hours. Where more than 12 hours have passed since insertion, remove the anchor and repeat the operations specified in Section 1107.5 .

The inner grout annulus inside the duct may be grouted in the borehole with the same grout used in the outer grout annulus between the duct and wall of the borehole.

Inject the grout with an independent tremie pipe.

Corrosion protection of the prestressing head shall be in accordance with Section 1103.7 of this Specification.

1108.2 Performance

Cementitious grout for grouting of a ground anchor shall:

(a) in permanent anchors that are grouted in-situ, fill the internal and external annuli of the complete bond length and the majority of the free length
(b) after curing, provide adequate strength to prevent bond failure in the bond length between tendon and grout, duct and grout, and borehole and grout
(c) contribute to the protection of the tendon against corrosion, even though it is likely that tensile cracking of the grout will take place during stressing of the tendon
(d) have fluid characteristics to penetrate and fill all voids in the assembled anchor and surrounding ground to protect the tendon and develop the required anchor load capacity

Grouts shall have high bleed resistance, low shrinkage and high fluidity and conform to Table 1108-1 when tested as specified.

Table 1108-1: Performance requirements for Cement Grout

Property	Test Method	Criteria	Comments
Bleeding	ASTM C940[(1)]	Final bleeding < 0.5%	Measured when two successive readings show no further expansion or bleeding
Volume change	ASTM C1090	Maximum height change @ 1 day & 28 days 0.1% and 0.3%	
Early expansion	ASTM C940	< 2% at 3 hours	Temperature tolerances are 20 °C ± 5 °C

Fluidity	ASTM C939(2)	Immediately after mixing: Efflux time < 20 s 45 minutes after mixing: Change in efflux time < ± 3 s	Target efflux time for the site conditions shall not vary from nominated value by more than ± 2s.
Minimum Compressive Strength	ASTM C942	20 MPa at 7 days 30 MPa at 28 days	Use 50 mm cubes

Notes:

(1) The test method shall be modified to simulate wicking of strands as follows: Cut a 1000 mm long piece of 12.7 mm 7-wire pre-stressing strand (wrap strand at cuts with suitable tape to prevent splaying the wires when it is cut). Degrease and clean the cut strand. Insert the piece of strand vertically and centrally into the grout cylinder using a centraliser and secure in position. Introduce the grout into the graduated cylinder as per the test method. Take readings as per the test method.

(2) A modification may be introduced to the test method as follows. Fill the flow cone to the top instead of to the standard level. Measure the efflux time as the time measured to fill the one litre container placed directly under the flow cone.

1108.3 Mix Design and Testing

For grout materials, refer to Clause 1103.4 .

Do not use additives unless you can demonstrate that the additives will not harm grout performance or anchor components.

Carry out preliminary testing and prove that the grout mix conforms to Table 1108-1 prior to grouting the Suitability anchor.

Carry out tests for bleeding, fluidity and compressive strength tests conforming to Table 1108-1 at the frequency specified in Table 1108-2.

In the event of nonconformity, stop grouting and modify operations to achieve the specified bleed and strength.

Table 1108-2: Minimum Grout Testing Frequency (Only for Anchors)

Section	Characteristic Analysed	Test Method	Minimum Frequency of Testing
1108.2	Bleeding	ASTM C940	One test or one test each 4 hours, whichever is the greater
1108.2	Fluidity	ASTM C939	One test per batch
1108.2	Compressive Strength Test	ASTM C942	Six cubes per anchor or batch, whichever is the lesser

1108.4 Mixing

Hold adequate stocks of cement or bagged mixes at the grout mixer to ensure continuity of grouting.

Use only fresh cement and bagged mixes less than 1 month old. Use only fresh cement that is free of lumps. Carry out preliminary low volume mixing and discharge to waste all surplus water from the mixer. Water cement ratio shall be 0.40 to 0.45.

Batch into mixers by mass for all mix constituents except liquids which shall be by volume. Use whole bags of cement or approved packaged grout mixes clearly marked with the bag mass. Supply additives in individual doses to suit each batch size.

Keep the grout continuously agitated after mixing. Where required, feed the grout by gravity from the mixer through a screen with 2.36 mm nominal apertures attached to the grout pump.

Utilise for grout pumping a recirculating system where the grout is continuously discharged back into the agitation tank. Use the grout as soon as possible after mixing and in any case within 45 minutes of adding cement to the

mixing water. Maintain a continuous supply of grout by mixing the next batch of grout whilst pumping the previous batch.

Keep the grout temperature between 5°C to 30°C during mixing or pumping. Heat or cool the mixing water if necessary to achieve this.

1108.5 Pumping Equipment

Grout pumps shall be of a type, quantity and size which is suitable for the grouting required, with an outlet pressure of at least 1.0 MPa and be capable of pumping the grout at a rate appropriate to the required rate of rise. Run the grout pump continuously for the duration of the grouting of each anchor.

Provide backup grouting equipment and submit procedures for controlling and handling interruptions to grouting operations i.e. interruptions either to continuous grout injection or to continuous efflux of water from the borehole.

Carry out grouting using supply lines directly connecting the pump to the down-hole tubes. All connections, valves and lines shall be pressure rated to at least 1.0 MPa.

Locate grout fittings and pressure gauges to enable control and monitoring of pressure during injection of the grout to the down-hole tubes. Pressure gauges shall be calibrated and fittings at the tops of boreholes must allow discharging to waste.

1108.6 Procedure

a. General

Circulate sufficient water through the grout tubes to ensure all air has been displaced and continue circulating the water until the emerging water is clear. Keep the outer and inner annulus grout tubes and grout hoses filled with water at the commencement of grout injection.

Prior to commencing grouting, measure the fluidity which shall not vary from the target fluidity by more than ± 2 sec, and in any case shall not be more than 22 sec. Do not use any grout which is non-conforming.

Inject the grout through the feeder tubes to the bottom of the hole and anchor. Where the bottom of the drill hole is at a level more than 300 mm below the bottom of the anchor, grout the bottom section of the hole to approximately the level of the bottom of the anchor and then simultaneously grout both the hole and anchor.

Inject the grout continuously until all the water is displaced from the outlet vents and the emerging grout has the same fluidity as the grout entering the feeder tubes. Continue grouting until the measured fluidity is within ± 20% of that of the injected grout. Carry out fluidity testing until the emerging grout complies.

Once the emerging grout has reached the fluidity of the injected grout, continue observation of the process by an experienced operator, and continue discharging the grout until there is no doubt that all zones of low quality grout have been displaced.

Where ducts are particularly long, ensure that the head of grout within the duct is balanced with the head of grout in the borehole annulus during grouting.

Within 30 minutes of completion of grouting, flush out the top of the grout column to a depth sufficient to allow the strands to be spread to accommodate the pre-stressing head. This depth shall be at least equal to the deviation length specified for the anchorage of the ground anchor system used. Flushing out is also required to avoid excessive compressive stresses in the grout column from strut action between the grout column and the bearing plate or anchorage and the structure.

Support the anchor for a minimum of 24 hours following completion of grouting.

b. Temporary Grouted Anchors

Carry out grouting of the entire borehole length using a single grout tube that extends to the base of the borehole.

Where end of casing pressure grouting is used, on completion of grouting the borehole, couple the drill head to the drill casing and withdraw the casing gradually. During withdrawal, apply grout pressure of up to 1 MPa at the drill head flush inlet passage of the drill casing to inject grout into the ground within the bond length.

Where post grouting is used, install supplementary grout pipes alongside the duct with valves at specific locations and apply between 2 MPa and 4 MPa of pressure to the grout to break through the in situ grout column into the ground. Carry out post grouting between 2 hours and 24 hours after borehole grouting.

c. Permanent Anchors With In-situ Grouted Ducts

Install two separate feeder pipes, one to the base of the borehole in the outer grout annulus and the other in the inner grout annulus to the base of the duct.

Prior to grouting, determine the volumes of the grout required to fill the inner annulus, deducting the volume occupied by the tendon and other anchor components, and the volume needed to fill the outer annulus. Use these volumes to assess the effectiveness of the grouting.

During grouting, keep the head differential between the inner and outer grout annuli less than that equivalent to 2 m of grout, unless the sealed duct has adequate capacity to resist this head differential without damage or leaks.

Typically the volume per metre of the outer annulus is greater than that of the inner annulus by a factor of between 2.0 and 2.5. Use these volume differentials to control the grouting, and grout using:

(a) For anchors up to 15 m long - operator estimate
(b) For anchors over 15 m long - calibrated water return tanks.

1108.7 Conformity Records

Maintain conformity records for the grouting of each anchor.

1109 LOAD TESTING

1109.1 General

The Engineer shall approve the test method and the monitoring system used for each test. For each test, load the anchor in stages in accordance with the specified test procedure.

In this Specification, three types of on-site load tests are specified:

(a) Proof
(b) Suitability
(c) Acceptance

For the definitions of each test, see Section 1102.3 .

Load test at the frequency specified in Table 1109-1 unless specified otherwise.

Table 1109-1: Minimum Load Testing Frequency (Only for Anchors)

Section	Type of Test	Type of Ground Anchor	Minimum frequency of testing for each type of ground anchor and each ground condition
1109.3	Proof	Exploratory or investigation	As required by designer or as specified on the Drawings
1109.4	Suitability	Low risk and temporary	≥ 1% of installed anchors or 1, whichever is greater
1109.4	Suitability	High risk and temporary Normal risk and permanent	≥ 2% of installed anchors or 2, whichever is greater
1109.4	Suitability	Critical and permanent	≥ 2% of installed anchors or 3, whichever is greater
1109.5	Acceptance	All	All remaining anchors

1109.2 Loading and Monitoring

Apply and release loads smoothly to prevent shock or dynamic loading of the anchor.

During all tests, monitor and record the applied load and tendon extension at each load increment.

To assess the behaviour of the anchor at peak load, monitor performance by measurement of load loss while the extension is kept constant as verified by measurements i.e. relaxation test.

Monitor anchor performance at lock-off by carrying out accurate lift-off tests at specified periods after lock-off, i.e. load monitoring.

Where proven accurate load cells are part of the jacking system both these tests may be carried out at Test Load T_P and Lock-off Load T_O to verify anchor performance.

1109.3 Proof Tests

Carry out proof Tests in advance of the installation of working anchors to verify for the designer that the failure load or the bond capacity of an anchor at the grout/ground interface provides the required resistance in the working anchor.

The resistances achieved relate to the ground conditions, anchor materials used and the construction methods adopted by the Contractor.

Proof Tests may be specified where anchors are to be used in ground conditions not yet tested by previous Proof Tests or where greater design loads are to be used than those adopted in similar ground conditions.

At a Project Site where variable ground conditions are expected, Proof Tests may be used to assess the performance of anchors founded in different strata.

Anchors for Proof Tests are loaded more rigorously than working anchors, so it is generally necessary to increase the area of the tendon to accommodate the higher load requirements, or to test shorter bonded lengths to induce a grout/ground interface failure.

Load the anchor to failure or to a maximum test load which shall not exceed 80% for strands or 75% for bars of the minimum breaking load of the tendon (T_U), whichever is lower.

Throughout Proof Tests, investigate the characteristics of load loss at each load cycle peak (refer Table 1109-2). Failure is deemed to be reached when at constant extension the load loss due to relaxation exceeds 2% of the maximum test load over a 5 minute period.

Table 1109-2: Recommended Load Increments and Minimum Periods of Observation for Proof Tests

Load Increment (% of T_U)							Minimum Period of Observation (Minutes)
Cycle 1	Cycle 2	Cycle 3	Cycle 4	Cycle 5	Cycle 6	Cycle 7 & 8	
5	5	5	5	5	5	5	1
10	20	30	40	50	60	70	1
15	25	35	45	55	65	75	1
20	30	40	50	60	70	80	5
15	20	30	40	40	50	50	1
10	10	15	20	20	30	30	1
5	5	5	5	5	5	5	1

Note: *Plot load-displacements as the test proceeds. At an early stage observe trends and, in particular, yield of the bond length as failure approaches.*

Assess the anchorage resistance Ra in accordance with AS 5100.3 or equivalent accepted by the Engineer.

Proof Tests may be extended as required to verify the actual performance of any component of the anchor, these being typically:

(a) Bond capacity at the tendon to grout interface
(b) Bond capacity of the duct to grout interface
(c) Integrity of corrosion protection system during and after completion of testing
(d) Performance of new anchor systems e.g. multiple anchor, removable anchor or carbon fibre tendon systems etc.

Proof Tests may be carried out on the Project Site or under controlled laboratory conditions using gun-barrel type tests (see Figure 1102-6) which allow component inspection after testing, this being preferred when the integrity of the duct of a ground anchor system is being investigated.

Do not use anchors subjected to Proof Tests as working anchors.

1109.4 Suitability Tests

Prior to carrying out a Suitability Test, take into account the results of Proof Tests or of relevant prior published data that will form the basis of or validate the design of working ground anchors, the required resistance at each interface and the ability of the anchor to sustain load.

Tendons, drilling, grouting and construction methods for Suitability Tests shall be identical to those proposed for the working anchors.

Suitability Test objectives shall demonstrate:

(1) Acceptable load/extension behavior of the anchor under cyclic loading and the magnitude of the elastic extension and permanent displacement of the tendon
(2) That tendon extensions, following corrections for head movement etc., lie between 90% and 110% of the values calculated using design load, tendon area, tendon elastic modulus and design free anchor length (see Section 1109.6 b.)
(3) That the calculated value of apparent tendon free length lies between 90% and 110% of the design free anchor length, calculated using the measured elastic extension values (see Section 1109.6 b.)
(4) That in the event of nonconformity with design values, the repeatability of load/extension characteristics can be verified using extra test cycles (see Section 1109.6 b.)
(5) That relaxation characteristics following Acceptance Testing (see Section 1109.6 b.) are acceptable.

Use the results of Suitability Tests to verify the performance of represented working anchors constructed in exactly the same way and under identical ground conditions at the frequency specified in Table 1109-1. Where varying ground conditions are known or are encountered, then install and carry out Suitability Tests on additional anchors.

Suitability anchors, subject to satisfactory performance as assessed by conformity to the relevant acceptance criteria of Section 1109.6 b. , may be used as working anchors.

The Test Load T_P for Suitability anchors shall be selected in accordance to design calculations but shall not exceed 0.8 T_U for strands or 0.75 T_U for bars.

Loading cycles and minimum periods of observation are given in Table 1109-3.

Table 1109-3: Recommended Load Increments and Minimum Periods of Observation for Suitability Tests

Load Increment (% of Test Load - T_P)						Minimum Period of Observation (Minutes)
Cycle 1	Cycle 2	Cycle 3	Cycle 4	Cycle 5	Cycle 6	
10	10	10	10	10	10	1
	25	40	55	70	85	1
25	40	55	70	85	100	5
	25	40	55	70	85	1
10	10	10	10	10	10	1

Load suitability anchors to Test Load T_P in a minimum of six load cycles.

Where relevant Proof Tests have previously been carried out, load Suitability anchors using one initial unmonitored cycle and 3 repeat cycles to Test Load T_P.

1109.5 Acceptance Tests

Carry out an Acceptance Test on any working anchor not subjected to a Suitability Test.

For anchors up to 15 m long carry out one unmonitored preliminary loading cycle to Test Load T_P.

Load in 4 equal increments from Initial or Datum Load T_A to Test Load T_P and then unload in 4 equal increments from T_P to T_A. Loading cycles and minimum periods of observation are given in Table 1109-4.

Table 1109-4: Recommended Load Increments and Minimum Periods of Observation for Acceptance Tests

Load Increment (% of Test Load - T_P)	Minimum Period of Observation (Minutes)
10	1
40	1
70	1
100	5
70	1
40	1
10	1

Observe and record relaxation test results and relaxation to Lock-off Load T_O and apply the relevant acceptance criteria of Sub Section 1109.6 b. to assess conformity.

1109.6 Assessment and Acceptance Criteria

a. General

Assess all ground anchors covered by this Specification at Test Load T_P and Lock-off Load T_O. Assess anchor performance by carrying out Suitability Tests on Suitability anchors before testing the working anchors using Acceptance Tests.

Anchors shall conform to all the acceptance criteria of Sub Section 1109.6 b. .

Only accept a working load for an anchor that conforms to all the acceptance criteria of Sub Section 1109.6 b. .

b. Assessment Criteria and Mode of Application for all Suitability Anchors and all Acceptance Tests

(a) Load the anchor in a single unmonitored load cycle up to Test Load T_P and return to Initial or Datum Load T_A.

This preload cycle is intended to:

(i) accommodate wedge draw-in of tendon gripping system
(ii) overcome initial friction forces
(iii) achieve bedding of the bearing plate or cast-in anchorage
(iv) achieve displacement of the structure
(v) reduce the contribution of extraneous displacements
(vi) allow a more accurate determination of elastic extension during the monitored cycle

(b) Calculate the theoretical elastic extension δL_r of the tendon at Test Load T_P from Initial or Datum Load T_A using data from the anchor assembly schedule prepared in conformity with Section 1106.8 :

$$\delta L_r = \frac{(T_P - T_A)L_{fr}}{A_t E_t}$$

Where,

A_t = area of steel in the tendon (mm^2)
E_t = elastic modulus of the tendon (MPa)
L_{fr} = free length of tendon between top of bond length and wedges at rear of jack (mm)
δ_{Lr} = calculated elastic extension of tendon (mm)
T_A = Initial or Datum Load (N)
T_P = Test Load (N)

(c) Calculate values of 90% and 110% elastic extension at Test Load T_P from Initial or Datum Load T_A to provide criteria for assessing anchor conformity i.e. measured extensions δ_{Le} between 0.9 δ_{Lr} and 1.1 δ_{Lr} will be conforming.

(d) When the measured extension is outside these limits, carry out as appropriate, while the stressing equipment is in place, two additional load cycles to verify load/extension repeatability (see Item g).

(e) For Suitability Tests and Acceptance Tests carry out a program of cyclic loading and unloading using load increments and minimum periods of observation given in Table 1109-3 and Table 1109-4 respectively. After the peak load in each cycle is reached, take measurements of the load loss with the deformation held constant for a time interval of 5 minutes, but this time may be subsequently increased to 15 minutes and then to 50 minutes to obtain compliance to a limiting value in Table 1109-5.

Table 1109-5: Limiting Values of Load Loss with Time

Observation Period (minutes)	Limiting Load Loss Within Observation Period
0 to 5	Max 2% of T_P
5 to 15	Max 1% of T_P
15 to 50	Max 1% of T_P

(f) Based on the load/extension results, calculate the effective tendon free length L_{ef} at Test Load T_P using data from the anchor assembly schedule prepared in conformity with Section 1106.8 and the load test records and calculate the limits for acceptance as follows

$$09L_{fr} \leq L_{ef} \leq (L_{fr} + 0.5L_b)$$

or

$$09L_{fr} \leq L_{ef} \leq 1.1L_{fr}$$

and

$$L_{ef} = \frac{\delta L_e A_t E_t}{(T_P - T_A)} \times 10^{-6}$$

Where:

A_t = cross-sectional area of steel in the tendon (mm^2)
E_t = elastic modulus of the tendon (MPa)
L_b = tendon bond length
L_{ef} = effective tendon free length between top of bond length and wedges at rear of jack
L_{fr} = free length of tendon between top of bond length and wedges at rear of the jack
T_A = Initial or Datum Load (N)
T_P = Test Load (N)
δL_e = measured elastic extension of the tendon (mm)

If the corrected elastic extension lies within these limits, the effective free length satisfies the acceptance criteria.

(a) If the anchor does not satisfy either of these limits, then reload the anchor in two cycles to Test Load T_P. Provided $L_{ef} \geq L_{fr} + 0.6\ L_b$ and the anchor has repeatable load/extension behaviour in the second cycle as demonstrated by the extension in the second cycle being within ± 5% of that in first cycle, this criterion is satisfied.

If this criterion is not satisfied, then extend the test with the agreement of the Engineer or replace or down rate the anchor.

(b) The Initial Residual Load T_{RI} measured by Lift-off Test immediately after lock-off shall not be less than 110% and not greater than 115% of specified Lock-off Load T_O. If the Initial Residual Load T_{RI} is less than 110% of the specified Lock-off Load T_O, increase the jacking force T_J and repeat the test cycles.

(c) The Residual Load TR measured by Lift-off Test at 48 hours after lock-off shall not be less than 96% of the initial Residual Load TRI.

(d) Where the Residual Load TR at 48 hours after lock-off is less than 96% of the Initial Residual Load TRI, the test may be repeated for two further 48 hour periods.

If the Residual Load T_R at 96 hours after lock-off is greater than 94% of T_{RI} or at 144 hours is greater than 93% of T_{RI}, the Residual Load Criterion is satisfied.

If this criterion is still not satisfied, extend the test with the agreement of the Engineer or replace or down rate the anchor.

1110 STRESSING

1110.1 Commencement of Stressing Operations

Do not stress anchors until all the grout of the anchor is at least fourteen (14) days old and the average compressive strength of all the grout in the borehole is at least 25 MPa.

1110.2 Safety Precautions

Take care during stressing to ensure the safety of all personnel engaged on the work and of other persons in the vicinity.

Secure the jack in such a manner that it will be restrained should the grip on the tendon be lost. Do not allow any person to stand behind the jack while tensioning is in progress. Operate the jacks, measure the extensions and carry out any associated operations in a manner and from positions which ensure safety.

Erect "stressing in progress" signs and barricade off hazardous areas.

1110.3 Stressing Equipment

The stressing equipment shall have rated load and travel capacities greater than 90% of the specified minimum breaking load and corresponding extensions of the ground anchor tendon.

The design of the jacking system shall allow the taking of accurate measurements conforming to Section 1110.4 .

Equip the pump with a site-regulated pressure overload relief valve to prevent tendon damage from over tensioning.

All connections between the pump and the jack shall have a bursting pressure of at least four times the maximum pump pressure rating.

Pressure gauges shall conform to the requirements of AS 1349 or equivalent. The diameter of the gauge shall not be less than 150 mm and shall be of such a type which will allow visual reading to the nearest 0.5 MPa.

When the tendon is stressed to 75% of its breaking load, the indicator shall be between 50% and 75% of the full-scale reading.

Fit gauges with a snubber or similar device to protect them against sudden release of pressure.

When required for audit purposes, make available a master gauge for checking the gauge accuracy. Make provision for attaching this gauge for audit purposes.

Inspect gauges before starting each stressing operation and if defective, replace immediately with another calibrated gauge. Replace any gauge that has sustained hydraulic or other shock with another calibrated gauge.

Where a discrepancy occurs between the two pressure gauges, identify the defective gauge using the master gauge and dispatch for re-calibration or replacement.

Alternatively, provide a pressure gauge as above and a digital load readout unit with up-to-date calibration to safeguard against load monitoring errors.

Provide calibration certificates for each load cell, jack, pump and gauge or their combinations conforming to the following for the Engineer's approval before start the test:

(a) Jack, pump, and gauge combinations
   - i) Not more than six months old
   - ii) Separate certificates for each combination
   - iii) Each certificate accompanied with a pressure versus load curve for loading and unloading over the full operating range.

(b) Load cells
   Issued within the last fifty (50) stressing operations or not more 28 days old, whichever is less

(c) Dial gauges
Not more than 12 months old.

(d) Flowmeters and pressure gauges used during water testing or grouting
Issued within the last 200 operations or not more than 90 days old, whichever is less

1110.4 Measurement

Measure movements of the jack relative to a datum within an accuracy of ± 2% of the calculated elastic extension of the tendon δL_r at Test Load T_P and measure tendon loads within an accuracy of ± 2% of Test Load T_P using instruments graduated or with digital readouts to achieve these accuracies.

Check measurements of extensions using the movement of the jack, both before and after lock-off.

1110.5 Wedges

Wedges shall not damage the tendons during successive loading and unloading of the tendons. Draw-in to the permanent pre-stressing head shall take place only at lock-off.

During the testing or stressing of working anchors, allow no indents resulting from tendon gripping to form in the tendon below the pre-stressing head and allow no damage to the corrosion protection.

Seat wedges on each strand prior to commencing stressing. Detect slippage of individual strands within each anchorage by marking the strands with spray paint after applying the initial load.

1110.6 Preparatory Operations

Fill the cavity in the underhead zone at the top of the anchor with Corrosion Inhibiting Compound (CIC) before installing the bearing plate.

After positioning the bearing plate, install the pre-stressing head making sure that wire or strand tendons are not crossed within the free length. The bearing plate and tendon shall not be in contact. Locate the pre-stressing head and tendon at the centre of the anchorage and borehole.

Where the bearing plate or anchorage has previously been cast in the concrete, compensate for any misalignment of the plate or anchorage prior to stressing using purpose made shims below the pre-stressing head.

1110.7 Control of Stressing Operations

Stressing operations shall be carried out only by personnel with training and experience in this type of work.

Stress the anchors in the order indicated on the Design Drawings and in accordance with the applicable load test of Section 1109 .

Stress all strands or wires in a tendon simultaneously and uniformly using a single jack. Apply the tension smoothly at an even rate. On completion of stressing, release the jack gradually.

For multiple anchors, stress using multiple jacks, one at the head of each unit tendon. Hydraulically synchronise the multiple jacks so that identical loads are applied simultaneously to each unit anchor. The unit anchor load shall be the total ground anchor load divided by the number of unit anchors. Each unit anchor shall satisfy the general anchor acceptance criteria.

Complete all anchor stressing without interruption in as short a time as possible.

Estimate the jacking force T_J from the required Lock-off Load T_O based on the summation of:

(a) loss in pre-stress force due to elastic shortening (where applicable)
(b) draw-in; and
(c) anchorage friction.

The jacking force T_J shall not exceed 80% of the nominal minimum breaking load of the tendon for strands or 75% for bars, or the rated capacity of the stressing equipment, whichever is less, under any circumstances.

Complete and make available to stressing forms for each ground anchor, providing the following:

(i) identification of anchor
(ii) identification of jack and gauge
(iii) identification of load readout unit where applicable

(iv) Minimum Breaking Load of the tendon T_U

(v) Lock-off Load T_O

(vi) Jacking Force T_J

(vii) maximum applied load 0.8 T_U for strands or 0.75 T_U for bars

(viii) calculated theoretical elastic extension of tendon δL_r at Test Load T_P

(ix) loads recorded during stressing with corresponding gauge pressures i.e. Initial or Datum Load T_A, Test Load T_P and maximum load

(x) measured tendon extensions corresponding to all recorded loads

(xi) measured bearing plate settlement corresponding to all recorded loads

(xii) corrected tendon extensions making due correction for bearing plate settlement at each recorded load

(xiii) measured load loss at each specified load and time period (2, 5, 10, 15 minutes etc)

(xiv) Initial Residual Load T_{RI} immediately after lock-off and Residual Load T_R at 48 hours etc

(xv) graph showing extensions versus loads for cyclic loading

(xvi) assessment of compliance with acceptance criteria.

Accompany stressing forms with graphs showing measured loads versus extensions δL, δL_e and δL_{pl} showing whether anchor behaviour is elastic or elastic/plastic.

1111 CUTTING OFF OF STRESSED TENDONS

Trim as appropriate the excess tendon protruding above the pre-stressing head to a length compatible with monitoring requirements and fitting of protective caps.

Cut off stressed tendons with a high-speed abrasive disc or wheel.

Fit the protective cap and fill it and the underhead zone with Corrosion Inhibiting Compound (CIC).

1112 MONITORING

1112.1 General

Where specified, install ground anchors to enable short-term or long-term monitoring. Ground anchors where wedges are to be reseated shall not be stressed to more than 75% of T_U.

For this purpose provision shall be made to enable the anchors to be monitored, distressed and re-stressed at any time.

Submit, in addition to the information specified in Section 1106.1 , drawings and cross-sections for monitorable anchors, detailing the bearing plate or anchorage casting, pre-stressing head, protective cap, provisions for corrosion protection and for carrying out Lift-off Tests.

Provide protective caps on all monitorable anchors to enable monitoring and increasing the tendon loads at any time after installation.

For anchors requiring controlled de-stressing, provide protruding strand lengths equal to the recorded strand extension plus approximately 300 mm, and provide extended protective caps.

Where access is difficult, fit anchors specified for long-term monitoring with robust electrical load cells with capacity greater than the nominal ultimate capacity of the tendon, calibrated to cope with changes in environmental conditions such as large temperature variations and grounded to protect against damage from lightning strikes.

Carry out Lift-off Tests on monitorable anchors by one of following methods:

(a) If the circular pre-stressing head has an external thread allowing fitting of equipment for jacking, comprising a threaded tube, stressing jack and stressing stool, carry out at least three 0.5 mm lift-offs and record the lift-off loads from the calibrated jack and pressure gauge combination.

If required, lift the pre-stressing head and fit purpose-made shims to increase anchor load

(b) If adequate strand length beyond the pre-stressing head is provided within an extended protective cap, fit a stressing stool and jack the tendon using the same procedure used during the Project Works. Replace

the extended protective cap following the testing to permit continued monitoring or to fit purpose-made shims or to carry out tendon distressing

(c) If at least 150 mm strand has been left beyond the pre-stressing head beneath the protective cap, check loads in individual strands using a coupler, stressing stool and calibrated monojack.

Note that controlled de-stressing of anchors is only possible using Method 2.

1112.2 Short Term Monitoring

Until the Date of Construction Completion and during defect liability period, the Contractor shall monitor the anchors which have been subjected to Suitability Testing, anchors fitted with a load cell and 10% of the remaining anchors. Type and location of the latter anchors will be decided by the Engineer and will depend on Acceptance Test results and the subsurface conditions revealed during excavation.

The monitoring frequency shall be as follows (after the date of completing the relevant stressing procedure under Section 1110 for each anchor); 7 days, 14 days, 1 month, 6 months and thereafter at 6 monthly intervals.

Inspect and report on the condition of the ground or structure at the anchor, the protection cap and corrosion protection, the pre-stressing head and the tendon.

After the inspection, measure the Residual Load T_R by Lift-off Test or direct reading of load cells.

Recalibrate, repair or replace at the Contractor's expense any load cell and associated equipment that is defective and/or results in unreliable readings. Measure by Lift-off Test the residual load where readings from a load cell are not reliable.

Reinstate the corrosion protection and replace the protective cap.

Shall the Residual Load T_R vary by more than ± 10% of the Initial Residual Load T_{RI} measured immediately after lock-off, inform the Engineer immediately.

Submit monitoring records for each anchor within three days of completing the monitoring to the Engineer.

1112.3 Long Term Monitoring

For the purpose of long term monitoring one electrical load cell shall be fitted as a part of the anchorage assembly for at least one anchor in fifty and any anchors considered critical by the Engineer.

The maximum capacity of any individual load cell shall be in excess of the stated ultimate capacity of the anchor to which it is fitted.

Submit for all the anchors information from load indicators and read-outs, together with measurement units and range, reading accuracy, long-term error, and the calibration procedures and sites for each item of the monitoring equipment.

1113 MEASUREMENT AND PAYMENT

1113.1 Measurement

Platform

Temporary works, such as temporary platform preparation prior to soil nailing shall be paid as a Lump sum item as indicated in the Bills of Quantities. Payment shall be made as;

60% of the lump sum under this item shall be certified upon the establishment of temporary platform for soil nailing works. 30% of the amount upon progress of soil nailing works as approved by the Engineer and the remaining 10% shall be paid when the temporary platform has been totally removed and site has been cleaned by the Contractor.

Ground Anchors

Ground anchoring work: the measurement shall include for drillings, tendons, ducts, bearing plates, grouting and other accessories. Quantity shall be measured by the linear meter along the anchor starting from bottom face of the anchor head (commencing ground surface) to the tip of the anchor. No payment shall be made for the anchor inside the anchor head.

Concrete Facing

Anchor facing made of concrete shall be measured in cubic meter including excavation, form work, reinforcement bars in-situ concrete C30/20.

Proof Test

Proof tests shall be measured in numbers and proof tests are required for anchors prior to the commencement of work for design verification and acceptance of construction work at site. Proof tests shall be performed for 1% as test anchors of the total number of working anchors or subject to a minimum of two and whichever is greater.

Suitability Test

Suitability tests shall be measured in numbers and suitability tests are required for permanent anchors for design verification and acceptance of construction work at site. Suitability tests shall be performed for 2% as test anchors of the total number of working soil nails subject to a minimum of three (3) and whichever is greater.

Acceptance Test

Acceptance tests shall be measured in numbers and acceptance tests are required for permanent anchors for design verification and acceptance of construction work at site. Acceptance tests shall be performed all remaining anchors.

1113.2 Payment

Ground Anchors

The quantities determine for anchors as provided above shall be paid for at the Contract unit rate which price shall be full compensation for all labour, materials, tools and incidentals necessary for completion of the work including drilling, drilling through incidental boulders, fabrication and installation of all accessories for anchors nails and grouting.

Concrete Facing

The quantities determine for anchor facing including as provided above shall be paid for at the Contract unit rate which price shall be full compensation for all labour, materials, tools and incidentals necessary for completion of the work including preparation of slope, formwork, reinforcement, concreting required for concrete facing construction and fabrication and installation of all accessories of the anchor head.

Pay Item	Description	Pay Unit
701(1)	Temporary working platform for soil nailing works	Lump Sum
1101(2)a	Ground anchors (up to 12 m length) inserted into bore hole with grouting and if required coupling (specify the nail dia. and hole dia.).	Linear meter
1101(2)b	Ground anchors (12 m - 24 m length) inserted into bore hole with grouting and if required coupling (specify the nail dia. and hole dia.).	Linear meter
1101(2)c	Ground anchors (more than 24 m length) inserted into bore hole with grouting and if required coupling (specify the nail dia. and hole dia.).	Linear meter
1101(3)	Concrete facing – C30/20 (including form work, reinforcement)	Cubic meter
1101(4)a	Proof test	Number
1101(4)b	Suitability test	Number
1101(4)c	Acceptance test	Number
1101(5)	Anchor heads for Ground anchors	Number

1200 ROCKFALL PROTECTION

1201 ROCK FENCE

1201.1 Description

This work shall consist of construction of barrier fence to protect the identified vulnerable area at the downslope against falling rock. The fence shall satisfy required strength and height as specified in the Drawings / Specification.

All materials shall be accordance with the standards given in this Specification unless otherwise accepted by the Engineer. Valid Material Test Certificate (MTC) shall be submitted by the Contractor prior to supplying of the materials.

Contractor shall submit full scale test certificates, MTC, technical data sheets, system drawings and foundation forces to the Engineer 28days before commencement of rock fence work, in case he wishes to use a different dynamic fence system to what specified in the Drawings/ Specification. Alternative dynamic fence systems with full scale test certifications from an acceptable source which satisfies the required energy, height and post spacing requirement may be used as approved by the Engineer.

When an alternative proposal for the fence system is submitted by the Contractor, required foundation details with calculation shall also be submitted along to the Engineer for approval. Where an alternative fence system is permitted by the Engineer, Contractor shall adhere to the manufacturers guideline for the installation of the particular system unless otherwise specified.

1201.2 Materials

Unless otherwise recommended by the manufacturer and accepted by the Engineer, all material shall conform to the following requirements. The requirements herein may vary as per the manufacturer of the fence components as approved by the Engineer upon submission of valid MTC and technical data sheets acceptable to the Engineer.

a. Primary Net

Rope net shall satisfy the requirements of Table 1201-1, unless otherwise approved by the Engineer. All components used such as shackles and sewing ropes shall be of the types recommended by the manufacturer of the net/ mesh unless otherwise specified. Net wires/ropes shall be in accordance with EN 12385-4.

Table 1201-1: Properties of Primary Rope Net

Property	500kJ Fence	300kJ Fence
Mesh opening size	150 mm (max)	150 mm (max)
Rope diameter	7 mm (min)	6 mm (min)
Lacing rope diameter	8 mm (min)	8 mm (min)
Shackle size (nominal)	3/8” (seam), 1/2” (lacing rope) S275JR to EN 10025	3/8” (seam), 1/2” (lacing rope) S275JR to EN 10025
Tensile strength of mesh	375 kN/m (min)	240 kN/m (min)
Corrosion protection	Zn or ZnAl (Class A), EN 10244-2	Zn or ZnAl (Class A), EN 10244-2
Clamps	breaking load shall be at least 1.5 times the breaking load of the steel ropes	breaking load shall be at least 1.5 times the breaking load of the steel ropes

b. Secondary Net

In the case where an alternative system is used as approved by the Engineer, and the smallest opening size>250mm in the proposed alternative net, a secondary net of following criteria shall be used in addition to the primary net.

Twisted hexagonal mesh shall satisfy the following requirements of Table 1201-2, unless otherwise approved by the Engineer. All components used such as shackles and sewing ropes shall be of the types recommended by the manufacturer of the net/ mesh unless otherwise specified. Mesh shall be in accordance with ASTM A975 (EN 10223-3).

Table 1201-2: Properties of Secondary Net

Property	Requirement (500Kj and 300kJ)
Mesh opening size	85 mm (max)
Wire diameter	2.2 mm (min)
Tensile strength of mesh	40 kN/m (min)
Corrosion protection	Galvanized & PVC coated to ASTM A975

c. Ropes

Wire ropes shall be used to hold the mesh in-between the posts as given in the Drawings. Ropes shall be in accordance with EN 12385-4 or equivalent acceptable to the Engineer. Ropes shall conform to the requirements of Table 1201-3.

Table 1201-3: Properties of Wire Ropes

Rope Element	Tensile strength (MPa)	Rope Diameter (mm)		Corrosion Protection
		500kJ	300kJ	
Top & Bottom support rope	1750 (min)	18 (min)	16 (min)	Zn or ZnAl (Class A) EN 10244-2
Middle rope	1750 (min)	18 (min)	16 (min)	Zn or ZnAl (Class A) EN 10244-2
Side stabilization rope	1750 (min)	12 (min)	12 (min)	Zn or ZnAl (Class A) EN 10244-2

Brake elements used on each rope shall be selected from products purposefully made for dissipating the energy of impact exerted in the ropes. Brake elements shall be a model/type produced to be used in rock fences of similar capacity and rope arrangement as specified.

d. Posts

Posts shall satisfy the properties given in Table 1201-4. All the components required to fix other components such as ropes, shackles and clamps of the fence shall be connected to the post as shown in the Drawings. All fabricated components where welded shall conform to BS EN 1090-2 and hot dip galvanized to the same standard as the post as specified to a continuous coating. Welding, where required shall be carried out with suitable manipulators and sequence for the work, which shall be subject to the Engineer's approval before welding is commenced. Surfaces preparation shall be properly carried out in accordance with the specified standards. Approval of welding procedure shall not relieve the Contractor of his responsibility for delivering proper weld.

Table 1201-4: Properties of Posts

Detail	500kJ	300kJ	Detail
Post type	HEB 180 (or equivalent)	HEB 160 (or equivalent)	S275JR steel to EN 10025
Corrosion protection	Hot-dip galvanized	Hot-dip galvanized	Minimum coating thickness of 85 micro-meters or 600 g/m^2 to AS/NZS 4680 or BS EN ISO 1461
Connection to the base plate	Fixed Fillet welded both sides 8mm (min) thickness	Fixed Fillet welded both sides 8mm (min) thickness	Fillet welded both sides 8 mm thickness to BS EN 1090-2
Spacing	5 m (max)	5 m (max)	Or as specified om drawings

e. Wire rope grips, Clamps or U-bolts

The wire rope grips (U-bolts) shall always be put on over the end of the rope that is not subject to stress, the dead end of the ropes shall be left unclamped as shown in the drawings. Clamps shall conform to EN 13411-5. The screw bolt material shall be property class 6.8 in accordance with BS EN ISO 898-1. Testing in accordance with EN ISO 898-1.

f. Shackles

Screw Pin Anchor or Chain Shackles Galvanized, and steel S275JR to EN 10025.

g. Base Plate

Base plate shall be of thickness 15 mm (min) and steel S275JR to EN 10025. Hot-dip galvanized to minimum coating thickness of 85 micro-meters or 600 g/m^2 to AS/NZS 4680 or BS EN ISO 1461.

Where utilized, welded connections to the base plate shall be covered with the Hot-dip galvanized coating consistent with the base plate and the H iron section as a continuous coating.

h. Anchors/ Dowels

Anchors shall be fabricated from ribbed steed bars of grade RB500 pursuant to SLS375 unless otherwise approved by the Engineer and fully hot-dip galvanized in conformance with requirements of AS 1214 or EN ISO 10684 (Hot-dip galvanized coatings on threaded fasteners) and AS 4680 or EN ISO 1461 (Hot-dip galvanized (zinc) coatings on fabricated ferrous articles) accordingly with minimum average coat thickness of 85 µm or 600 g per square meter.

Diameter of drilled hole, rebar shall be as shown in the Drawings.

The foundation anchor shall be threaded at the exposed end for a sufficient length to facilitate fixing of galvanized washer, overlap locking washers, nuts. Cut thread properties around steel bars shall be as per ISO metric coarse pitch threads pursuant to EN ISO 898-1. Proper machinery shall be used to cut threads around rebar to the precise dimensions such as the pitch and the diameter to the satisfaction of the Engineer.

Minimum length of nuts shall be 55 mm and 45 mm for nail bar diameters 32 mm and 25 mm respectively. The tightening nuts shall be of minimum strength grade 8 of BS 4190 or EN ISO 898-2 and tested according to the respective standards. The nut shall be tested to ensure it meets the proof load of at least the load corresponding to the yield strength of the rebar or 150 kN whichever is maximum without failure to BS 4190 or EN ISO 898-2 accordingly.

Anchor-eye shall be provided at the anchor heads where necessary. The connection between the anchor and the anchor eye shall at least satisfy the tensile load capacity of the anchor rebar.

When the thick protective coating is interfering the nut assembly, the nut thread shall be over-tapped pursuant to the tolerances in AS 1214 or EN ISO 10684. Where over tapping is carried out, the next higher grade of nut shall be used.

Spacers/ centralizers shall be used to properly place the dowel bar inside the drilled hole during the grouting process as acceptable to the Engineer. Unless otherwise specified in the drawings, centralizers for rock fence anchoring shall be as per Sub-Clause 701.2 d.

Damages to the galvanized layer need to be touched up immediately upon detection with approved anti-corrosive or marine paint by the Engineer. All excess to be removed carefully. The finished surfaces shall be clean.

Treaded portion of the dowels after getting damaged at the installation of nut shall be touched up by a marine paint approved by the Engineer.

i. Wire rope anchor

Wire rope anchor shall be installed to secure the support ropes, middle ropes, and bracing ropes onto the ground. Anchor rope diameter shall be as indicated in the Drawings and made from spiral steel wire rope of strength > 1750 N/mm^2, the ropes shall conform to EN 12385-10. Corrosion protection shall be in accordance with Class A of EN 10244-2 for wires and Hot Dip Galvanized as per EN ISO 1461 for steel articles.

Anchor-eye shall be provided at the anchor heads where necessary. The loop shall be protected with a multilayer Polyethylene/Aluminum pipe and is further reinforced with a hot dip zinc coated steel thimble. The two legs of the anchor shall be interconnected by steel clips, which allow for more space to increase the adherence between the grouting and the anchor. All the steel components shall be galvanized.

j. Grout for anchors

Unless otherwise shown on Drawings, grout for anchoring in rock fence shall be as per Sub-Section 701.2 c.

The grouting shall be of Ordinary Portland Cement and shall confirm to Sub-Section 902.1 . Hardened grout shall have a compressive strength of not less than 30 MPa at 28 days (BS 1881/ASTM C942).

k. Tor steel

Tor steel shall confirm to the Specification Clause 602 .

l. Concrete

Concrete for the foundation shall conform to the Specification Clause 601 .

1201.3 Construction Requirements

a. General

The Contractor shall submit the working drawings & method statement for installation of rock fence as per the drawings and obtain prior approval form the Engineer. Before commencement of construction, fence area shall be surveyed to determine the precise path of the fence. Precise fence installation path's geometric data with foundation level details shall be submitted to the Engineer for approval.

It may not always be possible to comply with the standard drawings due to the minor variations in the ground. Contractor shall make small adjustments to the cross-section or length of nets, ropes, posts, etc. as acceptable to the Engineer to ensure the intended functioning of the fence.

b. Foundation

Prior to planting the fence posts in the required manner, the ground shall be graded where necessary, so as to provide a neat appearance of the fence line. The foundation for posts shall be prepared as shown in the Drawings or as instructed by the Engineer. The ground at the foundation shall be graded inclined approximately 5° downslope. The rock fence system shall be installed after the foundation concrete (if any) has reached at least 7-days strength.

Steps to follow during the construction of post foundation in each soil conditions shall be as follows unless otherwise approved by the Engineer. In any case the foundation shall be inclined approximately 5° downslope.

On soil ground:

Drill holes for anchors as specified, set out and prepare ground and reinforce the concrete foundations, insert the anchors, spacers, and fastening nuts; anchor length shall be as per the drawings, using grout, fix the anchors in place in the ground, fill in the concrete foundation, place the base plate/ post and tighten the fastening nuts once the concrete and grout has reached at least 7-days strength.

On rock ground:

Drill holes for anchors into the rock at a right angle to the base plate, using grout, fix the anchors in place, a thin grout or C25/20 concrete levelling layer is intended to guarantee that the base plate of the post has a sturdy seat, position the post and base plate on grout levelling layer, Tighten the fastening nuts once the grout has reached at least 7-days strength.

c. Ropes

A support rope separation shall contain an intermediate anchoring as per the drawings. In typical terrain conditions Intermediate anchoring shall be provided after approx. 60 m unless otherwise accepted by the Engineer.

The support and lateral bracing ropes shall be connected to the correct anchors. The correct number of wire rope grips (U-bolts) shall be attached to the ends of the ropes. All ropes shall be installed using thimbles and wire rope grips as per the appended table. The grips shall be put over the end of the rope that is not subject to stress, the dead end of the ropes shall be left unclamped as shown in the drawings. The wire rope grips shall be fastened as specified. The bolt of the shackle shall be installed so that the bolt is always on the top.

d. Net

The net shall be correctly fastened to the support ropes via lacing ropes and shackles as per the Drawings to the satisfaction of the Engineer. The nets shall be connected to each other as per the Drawings. The sag of the top support rope shall be less than 3% of the distance between the posts.

All ropes, nets, shackles and wire rope grips shall be visually inspected for defects prior to their use. Any defective components should be discarded. Damages to the Hot-dip galvanized layer of any component need to be touched

up immediately upon detection with approved anti-corrosive or marine paint by the Engineer. All excess to be removed carefully. The finished surfaces shall be clean.

e. Anchors/ Dowels

Lateral, intermediate and post foundation anchors shall be as shown in drawings.

For lateral and intermediate anchors, anchor eyes shall be attached if not prefixed unless wire rope anchor is used.

Reinforcement shall be clean and free from loose rust and mill scale, dirt, oil, grease and paint at the time of fixing in position and subsequent grouting. Reinforcement shall be handled and stored in a manner that will prevent deformation.

Drilling for Anchors

All dowels shall be installed in bore holes drilled through the hard rock as identified by the Engineer at Site for a minimum length of 3m to the standard diameter specified in the drawings. Drilling of anchor holes shall be in the pulling direction, with a minimum angle of > 15° to the horizontal.

Holes for galvanized dowels/ anchors shall be minimum 100 mm in diameter or as shown on the Drawings.

During the drilling operation, the ground conditions encountered on a drill hole log together with all changes in ground type and notes on water levels encountered and drilling rates shall be recorded.

On completion of drilling, the drill hole shall be cleaned of all loose and deleterious material and protect or seal the drill hole opening to prevent the entry of foreign matter. Cleaning shall be carried out by flushing with air or compressed air using side jet bits, so as to ensure removal of all drill cuttings from the walls and bottom of the drill hole while avoiding excessive air pressure. Reinforcement shall only be installed in a clean hole free of debris and foreign matter.

Unless otherwise approved by the Engineer, no drilling shall be carried out at a place within 10 m radius of any freshly grouted anchors/ dowels, within 12 hours of the completion of grouting.

The drill holes for the anchors/ dowels shall be constructed within the following tolerances:

(e) Deviation in alignment of the drill hole shall not exceed 2°. Deviation from straightness shall not exceed 20 mm in any 3.0 m length of hole. Entry point of the drill holes shall be within ±10 mm of its design position on the ground.

(f) The depth of the holes as shown in drawings shall be within a tolerance of – 0, +100 mm.

(g) An allowance for over drilling (600 mm maximum) should be added to the depth where debris cannot be removed from the bottom of the hole.

(h) The maximum deviation of the diameter of the drill holes from the design diameter is –0, +10 mm.

Insertion of Anchors

Dowels/ Anchors shall be installed as shown in drawings. All dowels shall be installed in bore holes drilled through the hard rock as identified by the Engineer at Site for a minimum length of 3m to the standard diameter specified in the drawings.

Prior to anchor installation, the drill hole shall be cleaned of debris by air flushing methods as stated above.

Insert anchors in one careful operation at a controlled rate to avoid dislodgment of material from the wall of the drill hole and to ensure that centralizers and spacers are not displaced. If any damaged anchor or anchor with damaged galvanized coating during installation, shall be replaced. Insertion and grouting shall occur as soon as practicable following drilling, but in any event shall be completed within 12 hours after completion of drilling.

Grouting shall not be carried out without prior approval of the Engineer.

Grout Mixing

Batching of the dry materials shall be by weight. Measure the amount of water used with a calibrated flow meter or a measuring tank.

Grout shall be mixed by adding initially approximately two-thirds of cement to the water, followed by the additive if any, and then the remaining one-third of cement. Mixing shall be done for a sufficient time to produce a grout of uniform consistency.

The grout mixing process shall utilize a recirculating system where the grout is continuously discharged and recharged into the mixing unit during the mixing period. After mixing, grout shall be kept continuously agitated.

Grout shall be passed through a nominal 1.2 mm wire cloth/sieve to ensure a uniformly mixed grout prior to injection. Grout shall be used as soon as possible after mixing and in any case within 30 minutes of adding cement, unless approved retarding agents are used.

Any alternative mixing procedures proposed by the Contractor shall be approved by the Engineer before application.

Grouting

Grout shall be injected through a grout tube to the bottom of the hole. The grout tubes shall have a minimum internal diameter of 12 mm to ensure that blockages shall not occur during grouting operations and shall also be sufficiently robust to ensure that they are not damaged during handling.

During the grouting operation, the grout shall displace all air and water and fill the hole in a continuous operation until the emerging grout is of the same consistency as the grout being pumped in. The grout level shall then be checked by sitting for 5 minutes and top-up grout introduced if necessary, to ensure that the anchor is fully grouted.

Anchors shall be protected from accidental disturbance after grouting has been completed to ensure that damage of the grout/soil and grout/anchor bond does not occur.

1201.4 Test and standards of acceptance

General

The materials shall be tested in accordance with these Specifications and standards prescribed therein accordingly and shall meet the specified limits for acceptance.

The Contractor shall obtain approval from the Engineer for the full-scale test certificates and manufacturer specification including technical data sheet of major components including but not limited to posts, ropes, nets, anchors, and corrosion protection as acceptable to the Engineer, prior to supplying the material.

In addition, the Contractor shall submit valid Material Test Certificate (MTC) for steel sections, ropes, nets, reinforcement, anchor materials, and connecting accessories acceptable to the Engineer during the supply of material.

Tests carried out during construction shall conform to this Specification and shall be conducted as per the prescribed standards and as directed by the Engineer.

Pullout Test

A total of 3% of permanent/working anchors, unless otherwise approved by the Engineer, shall be subjected to Acceptance Test with a minimum of 3 nos. Test shall be carried out as per section 701.6 a. and as directed by the Engineer. The Engineer shall nominate the locations of anchors subject to Acceptance Test. The Engineer may direct additional locations for Acceptance Test if necessary.

Contractor shall propose an appropriate setup for load application for the test according to the anchor type (Post, Lateral and Intermediate).

Acceptance Test shall be carried out in the presence of the Engineer prior to the installation of ropes and posts. Injected grout shall have achieved a compressive strength of 30 MPa (i.e 28 days strength) before performing Acceptance Test. The maximum applied load during the acceptance test shall not exceed 80% of the ultimate tensile strength of the anchor rebar.

1201.5 Measurement & Payment

General

Rock fence shall be measured in Linear meter along including fabrication, supplying and installation of rock fall protection fence of specified height, energy criteria and post spacing. Fence length shall be measured from post base to base basis, the length between each post base shall be consider as a straight line and the fence components

that extend beyond the posts and path of the fence shall not be taken into consideration. No separate payment for excavation, formwork, reinforcement, concrete and anchors will be made and all such costs shall be included in rock fence rate.

The quantities determine for rock fence as provided above shall be paid for at the Contract unit rate which price shall be full compensation for all labour, materials, tools and incidentals necessary for completion of the work including provision of all components of the fence to the site, the Engineer's inspection, testing, setting out the location of the fence, excavation, drilling, collection of samples, the extra depth required to accommodate the cut-offs, slime etc., submission of drilling report, anchor installation, foundation construction, concrete and grout testing, assembling and fixing the fence components to the satisfaction of the Engineer.

Payment shall be made after the Contractor has completed the works to the satisfaction of the Engineer. The Contractor shall also submit all relevant quality assurance documents when applying for payment. Interim payments based on the proportion of work done maybe authorized by the Engineer provided that the Contractors intention to complete the task as specified is clear.

Pull-out Test

Pull-Out tests shall be measured in numbers for acceptance of construction work at site. Pull-Out tests shall be performed for 3% as acceptance of construction work at site of the total number of working anchors subject to a minimum of three.

The Pay Items and Pay Units shall be as follows:

Pay Item	Description	Pay Unit
1101(1)	Rock fence (specify the capacity and height parameters of the system) including interception structure, support structure, connection components, foundation, anchors and all necessary accessories.	Linear meter
1101(2)	Pull-Out test for Lateral, Intermediate and Post anchors	Numbers

1202 ROCKFALL DRAPERY NET

1202.1 Description

This work shall consist of construction of drapery net to protect the identified vulnerable area at the downslope against falling rock. The net shall satisfy required strength and height as specified in the Drawings / Specification.

All materials shall be accordance with the standards given in this Specification unless otherwise accepted by the Engineer. Valid Material Test Certificate (MTC) shall be submitted by the Contractor prior to supplying of the materials.

Contractor shall submit test certificates, MTC, technical data sheets, to the Engineer 28days before commencement of drapery netting work.

1202.2 Materials

All material shall conform to the following requirements unless otherwise specified.

a. Coated Metallic Mesh

Mesh shall satisfy the requirements of 701.2 g. as specified in the Drawings. All components used such as shackles and sewing ropes shall be of the types recommended by the manufacturer of the net/ mesh unless otherwise specified.

b. Ropes

Wire ropes shall be used to hold the mesh in-between the rope anchors as given in the Drawings. Ropes shall be in accordance with EN 12385-4 or equivalent acceptable to the Engineer. Ropes shall conform to the requirements of Table 1202-1 and as specified in the Drawings.

Table 1202-1: Properties of Wire Ropes

Tensile strength (MPa)	Corrosion Protection
1750 (min)	Zn or ZnAl (Class A) EN 10244-2

c. Wire rope grips, Clamps or U-bolts

The wire rope grips (U-bolts) shall always be put on over the end of the rope that is not subject to stress, the dead end of the ropes shall be left unclamped as shown in the drawings. Clamps shall conform to EN 13411-5. The screw bolt material shall be property class 6.8 in accordance with BS EN ISO 898-1. Testing in accordance with EN ISO 898-1.

d. Sewing ropes

Sewing wire of diameter as specified in Section 701.2 g. shall be used. Ropes shall conform to the requirements of Table 1202-1 and as specified in the Drawings.

Sewing wire shall be used:

- To connect adjacent rows of mesh to each other with an overlapped of 150 mm, and
- To connect the rows of mesh to the support rope,

unless otherwise approved by the Engineer.

e. Shackles

Screw Pin Anchor or Chain Shackles Galvanized, and steel S275JR to EN 10025.

f. Wire rope anchor

Wire rope anchor shall be installed to secure the ropes onto the ground as shown in the Drawings. Anchor rope diameter shall be as indicated in the Drawings and made from spiral steel wire rope of strength > 1750 N/mm^2, the ropes shall conform to EN 12385-10. Corrosion protection shall be in accordance with Class A of EN 10244-2 for wires and Hot Dip Galvanized as per EN ISO 1461 for steel articles.

Anchor-eye shall be provided at the anchor heads where necessary. The loop shall be protected with a multilayer Polyethylene/Aluminum pipe and is further reinforced with a hot dip zinc coated steel thimble. The two legs of

the anchor shall be interconnected by steel clips, which allow for more space to increase the adherence between the grouting and the anchor. All the steel components shall be galvanized.

g. Grout for anchors

Unless otherwise shown on Drawings, grout for rope anchor shall be as per Sub-Section 701.2 c.

The grouting shall be of Ordinary Portland Cement and shall confirm to Sub-Section 902.1 . Hardened grout shall have a compressive strength of not less than 30 MPa at 28 days (BS 1881/ASTM C942).

1202.3 Construction Requirements

a. General

The Contractor shall submit the working drawings & method statement for installation of rockfall drape as per the drawings and obtain prior approval form the Engineer. Before commencement of construction, installation area shall be surveyed to determine the precise coverage area. Precise drape installation area's geometric data with rope anchor positioning details shall be submitted to the Engineer for approval.

It may not always be possible to comply with the standard drawings due to the minor variations in the ground. Contractor shall make small adjustments to the cross-section or length of meshes, ropes, anchors, etc. as acceptable to the Engineer to ensure the intended functioning of the net.

b. Ropes

All ropes shall be installed as per the drawings and as acceptable to the Engineer.

The correct number of wire rope grips (U-bolts) shall be attached to the ends of the ropes. All ropes shall be installed using thimbles and wire rope grips as specified in Table 1202-2. The grips shall be put over the end of the rope that is not subject to stress, the dead end of the ropes shall be left unclamped as shown in the drawings. The wire rope grips shall be fastened as specified. The bolt of the shackle shall be installed so that the bolt is always on the top.

Table 1202-2: Installation of Wire Rope Grips

Rope Ø mm	Nominal Grip Size	Number of Grips	t (m)	C (mm)	Spanner Opening mm	Tightening Moment (Nm)
3	NG 5	3	20 - 40	40	8	2
4	NG 5	3	20 - 40	40	8	2
6	NG 6,5	3	24 - 48	55	10	3,5
8	NG 8	4	30 – 60	70	13	6
10	NG 10	4	30 - 60	85	13	9
11	NG 12	4	36 - 72	100	16	20
12	NG 12	4	36 - 72	100	16	20
14	NG 16	4	48 - 96	150	21	49
16	NG 16	4	48 - 96	150	21	49
18	NG 19	4	48 - 96	150	21	68
20	NG 22	5	51 - 102	180	24	107
22	NG 22	5	51 - 102	200	24	107
24	NG 26	5	57 - 114	230	30	147

t - distance between wire rope length = Approximate one clip length

Tightening moment is only valid for wire rope clips whose threads and surface making contact with the nut have been greased

c. Mesh

The net shall be correctly fastened to the support ropes via sewing ropes and shackles as per the Drawings to the satisfaction of the Engineer. The nets shall be connected to each other as per the Drawings. The sag of the top support rope shall be less than 3% of the distance between the anchors.

All ropes, meshes, shackles and wire rope grips shall be visually inspected for defects prior to their use. Any defective components should be discarded. Damages to the Hot-dip galvanized layer of any component need to

be touched up immediately upon detection with approved anti-corrosive or marine paint by the Engineer. All excess to be removed carefully. The finished surfaces shall be clean.

d. Anchors/ Dowels

Anchors shall be as shown in drawings.

For lateral and intermediate anchors, anchor eyes shall be attached if not prefixed unless wire rope anchor is used.

Anchors shall be clean and free from loose rust and mill scale, dirt, oil, grease and paint at the time of fixing in position and subsequent grouting. Anchors shall be handled and stored in a manner that will prevent permanent deformation.

Drilling for Anchors

All dowels shall be installed in bore holes drilled through the hard rock as identified by the Engineer at Site for a length and the standard diameter specified in the drawings. Drilling of anchor holes shall be in the pulling direction, with a minimum angle of > 15° to the horizontal unless specified in the Drawings.

During the drilling operation, the ground conditions encountered on a drill hole log together with all changes in ground type and notes on water levels encountered and drilling rates shall be recorded.

On completion of drilling, the drill hole shall be cleaned of all loose and deleterious material and protect or seal the drill hole opening to prevent the entry of foreign matter. Cleaning shall be carried out by flushing with air or compressed air using side jet bits, so as to ensure removal of all drill cuttings from the bottom of the drill hole while avoiding excessive air pressure. Rope anchors shall only be installed in a clean hole free of debris and foreign matter.

Unless otherwise approved by the Engineer, no drilling shall be carried out at a place within 10 m radius of any freshly grouted anchors/ dowels, within 12 hours of the completion of grouting.

The drill holes for the rope anchors/ dowels shall be constructed within the following tolerances:

(i) Deviation in alignment of the drill hole shall not exceed 2°. Deviation from straightness shall not exceed 20 mm in any 3.0 m length of hole. Entry point of the drill holes shall be within ±10 mm of its design position on the ground.

(j) The depth of the holes as shown in drawings shall be within a tolerance of – 0, +100 mm.

(k) An allowance for over drilling (600 mm maximum) should be added to the depth where debris cannot be removed from the bottom of the hole.

(l) The maximum deviation of the diameter of the drill holes from the design diameter is –0, +10 mm.

Insertion of Rope Anchors

Dowels/ Rope Anchors shall be installed as shown in drawings. All dowels shall be installed in bore holes drilled through the hard rock as identified by the Engineer at the Site.

Prior to anchor installation, the drill hole shall be cleaned of debris by air flushing methods as stated above.

Insert anchors in one careful operation at a controlled rate to avoid dislodgment of material from the wall of the drill hole and to ensure that centralizers and spacers are not displaced. If any damaged anchor or anchor with damaged galvanized coating during installation, shall be replaced. Insertion and grouting shall occur as soon as practicable following drilling, but in any event shall be completed within 12 hours after completion of drilling.

Grouting shall not be carried out without prior approval of the Engineer.

Grout Mixing

Batching of the dry materials shall be by weight. Measure the amount of water used with a calibrated flow meter or a measuring tank.

Grout shall be mixed by adding initially approximately two-thirds of cement to the water, followed by the additive if any, and then the remaining one-third of cement. Mixing shall be done for a sufficient time to produce a grout of uniform consistency.

The grout mixing process shall utilize a recirculating system where the grout is continuously discharged and recharged into the mixing unit during the mixing period. After mixing, grout shall be kept continuously agitated.

Grout shall be passed through a nominal 1.2 mm wire cloth/sieve to ensure a uniformly mixed grout prior to injection. Grout shall be used as soon as possible after mixing and in any case within 30 minutes of adding cement, unless approved retarding agents are used.

Any alternative mixing procedures proposed by the Contractor shall be approved by the Engineer before application.

Grouting

Grout shall be injected through a grout tube to the bottom of the hole. The grout tubes shall have a minimum internal diameter of 12 mm to ensure that blockages shall not occur during grouting operations and shall also be sufficiently robust to ensure that they are not damaged during handling.

During the grouting operation, the grout shall displace all air and water and fill the hole in a continuous operation until the emerging grout is of the same consistency as the grout being pumped in. The grout level shall then be checked by sitting for 5 minutes and top-up grout introduced if necessary, to ensure that the anchor is fully grouted.

Anchors shall be protected from accidental disturbance after grouting has been completed to ensure that damage of the grout/soil and grout/anchor bond does not occur.

1202.4 Test and standards of acceptance

General

The materials shall be tested in accordance with these Specifications and standards prescribed therein accordingly and shall meet the specified limits for acceptance.

The Contractor shall obtain approval from the Engineer for the manufacturer specification including technical data sheet of major components including but not limited to ropes, nets, rope anchors, and corrosion protection as acceptable to the Engineer, prior to supplying the material.

In addition, the Contractor shall submit valid Material Test Certificate (MTC) for ropes, nets, anchor materials, and connecting accessories acceptable to the Engineer during the supply of material.

Tests carried out during construction shall conform to this Specification and shall be conducted as per the prescribed standards and as directed by the Engineer.

Pullout Test

A total of 3% of permanent/working rope anchors, unless otherwise approved by the Engineer, shall be subjected to Acceptance Test with a minimum of 3 nos. Test shall be carried out as per section 701.6 a. and as directed by the Engineer. The Engineer shall nominate the locations of anchors subject to Acceptance Test. The Engineer may direct additional locations for Acceptance Test if necessary.

Contractor shall propose an appropriate setup for load application for the test according to the anchor type.

Acceptance Test shall be carried out in the presence of the Engineer prior to connecting of ropes. Injected grout shall have achieved a compressive strength of 30 MPa (i.e 28 days strength) before performing Acceptance Test. The maximum applied load during the acceptance test shall not exceed 80% of the ultimate tensile strength of the anchor rebar.

1202.5 Measurement & Payment

General

Payment shall be made after the Contractor has completed the works to the satisfaction of the Engineer. The Contractor shall also submit all relevant quality assurance documents when applying for payment. Interim payments based on the proportion of work done maybe authorized by the Engineer provided that the Contractors intention to complete the task as specified is clear.

Platform

Temporary works, such as temporary platform preparation prior to installation shall be paid as a Lump sum item as indicated in the Bills of Quantities. Payment shall be made as;

60% of the lump sum under this item shall be certified upon the establishment of temporary platform for soil nailing works. 30% of the amount upon progress of soil nailing works as approved by the Engineer and the remaining 10% shall be paid when the temporary platform has been totally removed and site has been cleaned by the Contractor.

Coated Metallic Mesh for Drapery Net

Coated Metallic Mesh shall be measured in Sq.m. No payment will be given for lapping of the Coated Metallic Mesh.

Ropes for Drapery Net

All ropes shall be measured in linear meters. No extra payment will be given for lapping or looped and gripped parts of the ropes at connections.

Rope Anchors for Bearing Plate Method

Rope anchors shall be measured in linear meters including drillings, supplying anchor and grouting, and the quantity shall be measured in linear meter along the anchor starting from interface between anchor eye and soil to the tip of the anchor (i.e. only the grouted length shall be measured for payment). No extra payment shall be made for the anchor eye.

Pull-out Test

Pull-Out tests shall be measured in numbers and pull out tests are required for test nails prior to the commencement of work for design verification and acceptance of construction work at site. Pull-Out tests shall be performed for 2% as test nails and 3% as acceptance of construction work at site of the total number of working soil nails subject to a minimum of two and three.

1202.6 Payment

Coated Metallic Mesh for Drapery Net

The quantities determine for Coated Metallic Mesh for Drapery Net as provided above shall be paid for at the Contract unit rate which price shall be full compensation for all labour, materials, tools and incidentals necessary for completion of the work including preparation of slope, materials for Coated Metallic Mesh, dowels, sewing ropes, clips fabrication and installation of all accessories of the Coated Metallic Mesh unless otherwise specified.

Boundary Rope for Drapery Net

The quantities determine for boundary ropes as provided above shall be paid for at the Contract unit rate which price shall be full compensation for all labour, materials, tools and incidentals such as dowels, sewing ropes, wire rope grips, shackles to be used to fix wire rope as per the Drawings necessary for completion of the work including fabrication, galvanizing and installation against the metallic mesh.

Rope Anchor for Drapery Net

The quantities determine for rope anchors as provided above shall be paid for at the Contract unit rate which price shall be full compensation for all labour, materials, tools and incidentals necessary for completion of the work including drilling, drilling through incidental boulders, fabrication and installation of all accessories for rope anchors and grouting.

Pull-out Test

Pull-Out tests shall be measured in numbers for acceptance of construction work at site. Pull-Out tests shall be performed for 3% as acceptance of construction work at site of the total number of working anchors subject to a minimum of three.

The Pay Items and Pay Units shall be as follows:

Pay Item	Description	Pay Unit
1101(1)	Temporary working platform for soil nailing works	Lump Sum

1101(2)	Wire Ropes (specify diameter) for drapery net including sewing ropes, wire rope grips, shackles and other necessary accessories.	Linear meter
1101(3)	Rope anchor (less than or equal to 12m length) inserted into bore hole with grouting (specify the nail dia. and hole dia.) for Drapery Net	Linear meter
1101(4)	Pull-Out test for rope anchors	Numbers
1101(5)	Coated Metallic Mesh for drapery net including sewing ropes, dowels, connecting clips, wire rope grips and other necessary accessories	Square meter

1300 INSTRUMENTATION AND MONITORING

1301 INSTRUMENTATION

1301.1 General

This work shall consist of implementing of an automated landslide monitoring system at the landslide location by supplying, installing, maintaining and monitoring of monitoring equipment as specified. The centralized monitoring station at NBRO is to receive and process the remote data and monitor the status of alarm posts strategically located in the area and issue hazard warning through the alarm posts to the affected community. The work shall be carried out in accordance with this Specification and in conformity with the Drawings or as directed and under the technical instruction and inspection of the Engineer.

All supplied instruments shall be in accordance with the requirements given Specifications unless otherwise accepted by the engineer. Valid technical data sheets of the supplied instruments shall be submitted by the Contractor prior to supplying of the materials.

The complete landslide monitoring system is consisted of the following components which shall be procured and installed by the Supplier under the guidance of the Engineer.

1) Central Monitoring and Recoding Station software
2) Network of monitoring instruments consisted of one or more of the following monitoring instrument types: Electronic Extensometers, Inclinometers, Automated Rain Gauges and Water Level Gauges installed in the selected landslide susceptible area connected to on-site Central Unit or recording station. The data collected by the Central Unit shall be transferrable Central Monitoring Station via GSM/GPRS network.
3) Alarm posts with strobe light and buzzer placed at strategic locations connected to Central Monitoring Station via GSM/GPRS network.
4) Long range night vision surveillance camera system

The instruments shall be supplied with all other auxiliary components required to automatically log and store monitored data on-site and transmit them to Central Monitoring Station to set off an alarm on-site as well as remotely through a GPRS/GSM enabled web data monitoring system.

The schematic representation of the required landslide monitoring system is illustrated in Figure 1301-1.

Figure 1301-1: Schematic representation of a landslide monitoring system

1301.2 Materials

Unless otherwise recommended by the manufacturer and accepted by the Engineer in case of an obsoleting of inherent technology or similar reason, all supplied instruments shall conform to the following requirements. All monitoring instruments shall be accepted after checking and certifying the accuracy of the function of the unit by the qualified team appointed by the Engineer.

a. Central Unit

A Central Unit or recording unit shall be installed at each site at the location specified in the Drawings or as specified by the Engineer. The function of this unit is to accumulate the data from each instrument installed at the site through their respective data loggers and transfer the accumulated data to the Central Monitoring Station through GPRS/GSM technology. As ground movement can be envisaged at landslide susceptible areas, the connection between the individual instruments and the Central Unit shall be maintained wireless and unaffected by the elements of weather or loss of connection. Real-time data collected at the site from all instruments shall be readable and downloadable at the unit. Further, a suitable protective enclosure shall be provided to encase the unit to prevent effect from adverse weather and vandalism.

b. Insertion-type Inclinometer

The main function of the insertion-type inclinometer is to measure inclination angle at required depth intervals with the aid of an inclinometer probe.

The insertion-type inclinometer provided by the Supplier shall consist of inclinometer probe, cable, and data read-out device to read from the sensor as well as compatible software to process data from the read-out for plotting purposes. The inclinometer probe, cable and data read-out device along with the associated software shall be from a single manufacturer to avoid compatibility issues.

Inclinometer Casing/ Guide Pipe

The inclinometer casing, through which the inclinometer probe will be driven down to required depth intervals, shall be of a diameter suitable for landslide monitoring, for long term and higher degrees of deformations having a minimum outer diameter of 48 mm (1.90 inch). Machine-broached grooves shall be present in the casing for inclinometer probe insertion. Inclinometer casing and all other components shall be made of ABS plastic or aluminum. Other components shall include top cap and bottom cap, rechargeable battery powered hand drill with tools to secure guide pipe and socket while sealant tape and vinyl tape or a suitable alternative approved by the Engineer shall be provided to completely seal off the socketed joints.

ABS and aluminum inclinometer casing and connections are shown in Figure 1301-2 and Figure 1301-3, respectively.

Figure 1301-2: ABS inclinometer casing, diameter in mm

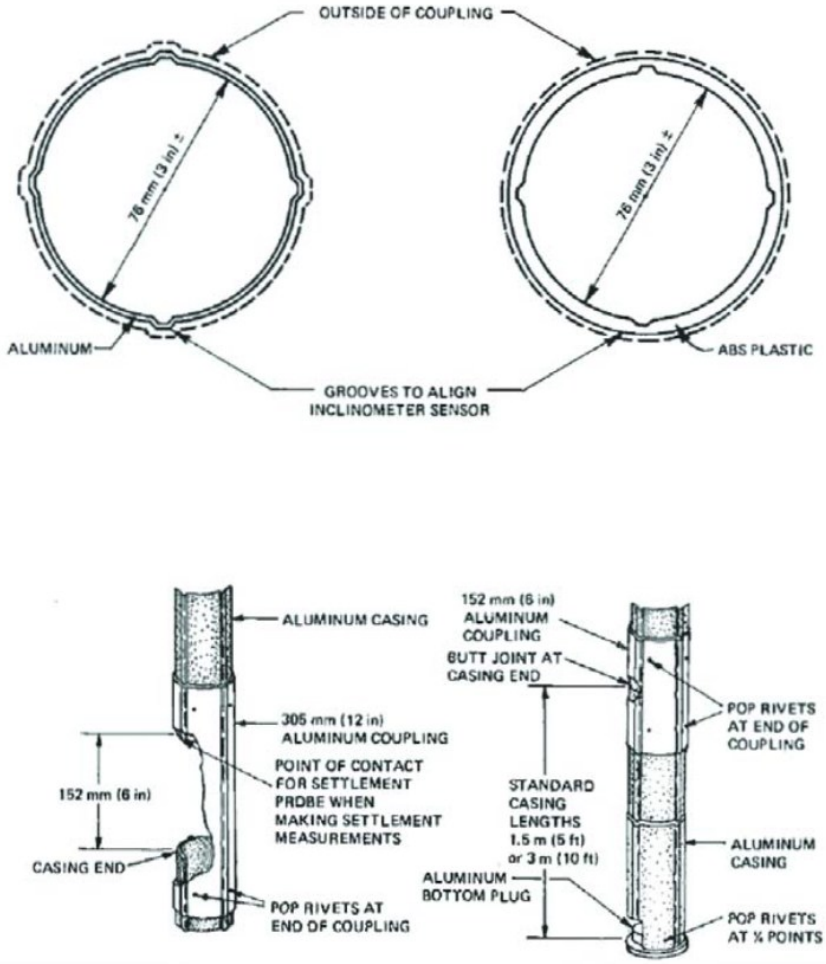

Figure 1301-3: Aluminum inclinometer casing and connections

The length of inclinometer casing shall extend to stable ground such as rock or stiff soil beyond the displacement zone to serve as a stable reference datum, a minimum of 5m below the anticipated zone of movement or as directed by the Engineer. A lockable iron protection box shall be supplied to the exposed portion of casing to prevent vandalism and accidental damage.

Inclinometer Sensor and Cable

The inclinometer probe shall be capable of providing readings in two mutually perpendicular directions at every 0.5m depth intervals.

The probe cable of minimum 50 m length shall be specially designed to be durable, waterproof, non-stretch, non-shrink with a high torque resistance.

Data Logger

A data acquisition unit shall be supplied accompanied by data reduction software to display and record the measurement data at each depth interval. The read-out device shall contain a rechargeable power supply and be capable of storing many data sets and able to perform field checks to verify the validity of the measurements. A custom-made computer software shall be incorporated to facilitate the communication between the data acquisition unit and Central Monitoring Station.

Table 1301-1: Specifications for the inclinometer sensor and data logger

	Item	Description
1	Seismic resistance	Approximately 30 ms^2
2	Impact resistance	Approximately 50 ms^2
3	Duration of continuous usage	With Alkaline battery approximately 10 hours
4	Temperature	0 – 50 ^{0}C

5	Sensor Weight	Approximately 3kg
6	Weight of data logger	Approximately 800g
7	Weight of cable	Approximately 13kg
8	Software for data analysis	Software for the analysis of inclinometer data with respect to rainfall data.

c. In-place Inclinometer

In-place type inclinometer system shall consist of an inclinometer casing and one or more inclinometer sensors permanently positioned at depths specified by the Engineer and associated with a suitable automatic data acquisition system to facilitate continuous monitoring.

Inclinometer Casing/ Guide Pipe

The Specification for guide pipe specified in Section 1301.2 b. applies for the in-place inclinometers supplied.

Inclinometer Sensor and Cable

The housing of the sensor shall be made of stainless steel with diameter compatible with the guide pipe. Other specifications of the sensor are as tabulated in Table 1301-2.

Table 1301-2: Specifications for the in-place inclinometer sensor

Resolution	+ 2 arc sec. or + 0.02 mm/m
Accuracy	+ 10 arc sec. or + 0.05 mm/m
Operation Temperature	0 - 80 ^{0}C

Data Logger

The Specification for Data Logger specified in Section 1301.2 b. shall apply for the in-place inclinometers supplied.

d. Extensometer

The function of the extensometer is to measure the expansion of surface tension crack of landslides and the instrument shall include data loggers installed separately at each location, internal automatic data recording system, extraction of recorded data using external monitoring device, issuing alarm system, manually re-programmable if required, displaying of current reading and functions.

The instruments shall be wire-line type extensometers. All the required accessories for the installation shall be provided by the Supplier. The instruments shall be battery powered and supplied with a compatible read-out device and linked to the web-based monitoring system for continued, unattended and real-time monitoring along with alarm output facility. The Supplier shall install user-friendly software for communication between the instrument and the central server at NBRO Head Office. The sensor type shall be precision potentiometer. The station shall detect any cable breakage conditions encountered at the site and transmit an alarm to the central station.

Major components of the instrument shall include fixing plate, data logger, communication port, alarm output, contact terminal, battery (main & sub batteries) with terminal back cover, battery holder, SD card slot, card slot cover, liquid crystal display, menu buttons, measurement wire, invar wire connection ring.

The instruments shall be battery powered for a continuous operational capacity with a minimum of 1 year. 48-hour battery life shall be present without solar power recharge. If battery exhausts within the guaranty period, the supplier shall replace with new batteries.

The instrument enclosure shall be designed to be suitable for outdoor installation being waterproof and in-built lightning protection system as well as static electricity resistance. A protective cover / fences for the instrument as well as the housing box including the data logger shall be provided by the Supplier to prevent vandalism.

Extensometer Cable

A suitable mechanism shall be applied to prevent sag of the cable as approved by the Engineer. The cable shall be made of non-corrosive heat resistant material. The other specifications for the extensometer cable are as tabulated in Table 1301-3.

Table 1301-3: Specifications for the extensometer cable

Minimum length	30m
Cable diameter	Approximately 0.5mm
Heat resistance	0.5 x 10-6 mm/oC
Wire Tension	Approx. (17 – 20) N

Data Logger and Readout Device

All extensometers shall include a suitable and compatible data recording facility either in-built or externally as a data logger. The data recording system will have a minimum storage capacity of 32GB and shall be programmable to collect data at desired time intervals as defined by the Engineer. The data stored shall be downloadable to a PC card at site and transferred to the Central Monitoring Station for real-time remote data collection. Additionally, it shall consist of a dial gauge or similar mechanism for visual indication of the amount of displacement of the stainless-steel cable from the initial setting. The other specification of the data logger is as tabulated in Table 1301-4.

Table 1301-4: Specifications for the data logger and readout device for extensometer

Protection box	To protect the extensometer data logger by extreme weather condition. (timber made)
Current consumption	Minimum 03 months
External dimension	Less than (150 h x 150 w x 250 l) mm
Weight	Less than 1700 g
Measurement range	(0 – 1000) mm
Display range	+ (1000 – 2000) mm

e. Water Level Gauge

Internal diameter of the perforated PVC pipe used for the installation shall be 50 mm with the minimum thickness of 4 mm (PNT 11). All the instruments shall be battery powered with a minimum of 2 year battery life without replacement. The sensor accuracy and resolution shall be 10 mm over 6 m range. Data loggers shall be supplied to log and store data from each water level gauge. The Supplier shall install user-friendly software for communication between the instrument and the central server at NBRO Head Office.

f. Piezometer

Internal diameter of the perforated PVC pipe used for the installation shall be 63 mm with the minimum thickness of 4 mm (PNT 11). Depth of the Piezometer is as specified in the Contract or as instructed by the Engineer. All the instruments shall be battery powered with a minimum of 2-year battery life without replacement. Data loggers shall be supplied with multiplexers to log and store data from all each water level gauge. The Supplier shall install user-friendly software for communication between the instrument and the central server at NBRO Head Office.

g. Automated Rain Gauge

Rain gauge shall consist of a sensor, a logger, and data transmission equipment. Logger and data transmission equipment are stored in a storage box. The Supplier shall install user-friendly software for communication between the rain gauge and the central server at NBRO Head Office through the central unit installed at each site. The Supplier shall install the rain gauges with storage capacity to store monitoring data of at least 10 years duration and downloadable to a computer. The transferred data shall be able to be checked real-time at the NBRO.

Table 1301-5: Specifications for automated rain gauge

Operating environment	Humidity: 0 to 100%,
Temperature:	+5 ℃ to+70 ℃
Aperture	φ20cm
Accuracy	± 0.5 mm at 50 mm/hr
Resolution	0.5 mm
General	To be compatible with the automated monitoring system central unit Automatic reset with remote access facilities
Data logger	Observation interval: 10 minute during rainy time Data storage: 10 years or more Interface: USB drive /SD card
Data transmission	Communication method: GSM /GPRS Transmitting retry: unlimited Resending function: Data of less than 3 hours
Transmitted data type	ASCII
System enclosure	Corrosion free powder coated Aluminum enclosure with sufficient size to store all sensors, battery and other equipment and protected from dust and humidity as per the manufacture's recommendation. The box shall be ventilated to prevent excessive heat build-up during day time.
Supporting pole	100 mm hollow GI pipe with metal fittings etc. to fix Storage box shall be included. The enclosure shall be mounted at 1.2 m height, the rain-gauge mounted at 1.5 m height. After the installation all metal work shall be painted with grey color anti-corrosive paint.
Fence and key	galvanized steel wire mesh with core diameter 3.2 mm and mesh opening size 50 mm 1,800 mm(W)×1,800 mm(D)×1,200 mm(H)
Lightning Arrester & grounding	10Ω or less should be common earth
Lightning protection for common power & GSM modem	The Supplier shall install manufacture recommended lightning protection accessories.
Solar battery system	The solar panels shall have sufficient capacity (Min. 40w) to operate the complete system and charge the battery system. The battery system shall have sufficient storage capacity (24A) to interdependently operate the system for 14 days with solar supply disconnected

The rain gauge shall have the capability to transmit rainfall data in user configurable time intervals to enable real time monitoring of rainfall data. The transmitting interval of observational data shall be 10 minutes during the rainy time and 30 minutes interval for with no rainfall transmitted using the proposed data communication system. The operational status of the rain gauge shall be able to be monitored remotely via the server. When transmission of observational data goes wrong, transmission shall be retried three times. If the retrying fails, it shall be transmitted along with the next transmission of data after 10 minutes. This re-transmission shall include data of the previous three hours.

Rain gauges shall have battery for data logger to observe and store the data for at least 1 year for cases whereby transmissions are failed over the long term.

Data Storage

The Supplier shall adopt a newest Data Base Management System (DBMS). The DBMS shall be installed to save all of the observed rainfall data. The retention period of the data shall be more than 10 years. The data shall be backed up using a backup function of a database. The backed-up data shall be saved to an external hard disk. The backup shall be carried out automatically once per week. The data shall be stored in the server in such a way that

hourly, 6 hourly, 12 hourly, 24 hourly, monthly, yearly, etc. can be downloaded in ASCII format for analytical purposes.

h. Hazard Warning Alarm Post

The alarm output function shall be a built-in system to give out alarms locally on site and remotely via a GSM network. It shall have the facility to set warning-level threshold values, which shall be as defined by the Engineer. The signal transferring capability of the transmitter shall be so that it is received by a siren located a minimum of 1 km away from the instrument.

The hazard warning alarm posts shall consist of an electronic buzzer alarm, strobe light with green, red, amber and blue high-power LEDs and modem. The position of buzzer, strobe light, other equipment and solar panel shall not be in a height less than 4 m from the ground level. A 100mm hollow squire GI pipe shall serve as the equipment-mounting pole, with 300x300x300 mm concrete base. The whole structure shall be securely mounted as directed by the Engineer.

The alarm post shall be powered with solar charger and battery backup system. The station shall function normally for minimum of 14-day period with complete loss of power from the solar panel. The system shall acquire and log the battery voltage and transmit to the central server every 5 minutes.

The system shall use the services of the best available GSM network at the location. The received signal (RSSI) strength of the GSM/GPRS network shall be logged and transmitted along with battery voltage reading.

Each alarm pattern and strobe color is activated by an automatic or manual command sent from the central monitoring station. The audio and visual color is coded to indicate the degree of hazard at present.

The alarms shall have a minimum sound radius of 2 km and designed suitable for outdoor operation. The installing locations of the sirens will be as decided by the Engineer at the site. The signal shall be sent to 4 sirens installed alongside the road and at locations specified by the Engineer at the site.

The alarm post and all the components shall withstand the elements of weather and climate for expected life of 10 years with minimum maintenance. The Supplier shall give full details of how the expected the life is achieved. The information may include details of material used, manufactures data sheets, test results etc.

i. Long Range Night Vision Camera

The outdoor surveillance cameras shall provide a coverage with an appropriate viewing angle as determined by the Engineer according to the site conditions to monitor any landslide, slope failure or rock-fall activity real-time. The viewing angle shall be able to be manually configured to cover the total affected area. The footage shall be of 720p or higher resolution with a compatible HD digital video recorder or other recording device. The camera shall be incorporated with infrared (IR) technology for nighttime monitoring with a built-in IR cut-switch to automatically enable or disable depending on the lighting condition. The night vision range shall be adequate to observe minimum 100m. The camera shall be weatherproof and able to be mounted on a pole or similar arrangement in an angle decided by the Engineer. Appropriate arrangement shall be provided for protection against vandalism.

Required Specification for Viewing angle, Range and Built-In IR cut switch given in the Table 1301-6 of Night Vision Long Range Camera.

Table 1301-6: Specifications for night vision long range camera (Wired/Wireless)

Item (1)	Required Specification (2)
Viewing Angle	Vari-Focal
Range	Up to 100 m
Built-In IR cut switch	Yes

1301.3 Construction Requirements

The installation of the landslide monitoring system shall be carried out in accordance with the requirements specified in this section and at locations shown in the Drawings unless otherwise specified by the Engineer.

a. Method Statement

The Contractor shall submit method statement for check boring and installation of each instrument type and obtain prior approval from the Engineer for commencement of works at least 28 days prior. The Method Statement shall clearly specify the method the Contractor proposes to carry out the installation works as per this Specification.

b. Check Boring

The Contractor shall carry out check boring with continuous sampling at locations specified in Drawings so as to identify the slip surface depth, soil profiles and ground water levels, prior to the commencement of the works under the supervision of the Engineer.

The check borings shall be drilled using rotary type boring machines and wash boring is not allowed. The diameter of the holes shall be between 50 and 100 mm.

The Contractor shall carry out continuous sampling, logging and standard penetration tests at 1.0m intervals during check boring as per BS 5930:2015.

Within 07 days of the completion of the drilling of each hole, the Contractor shall submit a drilling report and borehole log to the Engineer, accurately describing the boundaries of the geological formations, water level in the drill-hole etc. The format of the drilling report shall have the prior approval of the Engineer.

Previously specified locations of instruments and depths of installation may then be adjusted by the Engineer based on the results obtained from the check boring.

c. Installation of instruments

Insertion type (Probe type) inclinometer Installation

At least one inclinometer probe/sensor with data logger complying with the specification requirements shall have to be delivered and available at the site before completion of drilling and installing inclinometer casings. Initial reading shall be taken using the inclinometer sensor and data logger immediately after the installation of the casing and settlement of grout mixture.

The depth of the borehole shall extend beyond the depth of shear zone down to the stable ground such as rock or stiff soil beyond the displacement zone to serve as a stable reference datum, a minimum of 3m into the fresh bedrock as directed by the Engineer. The borehole diameter shall be sufficiently large to allow insertion of the inclinometer casing and to ensure that the backfill can be accomplished around the entire annulus without leaving voids or soft zones. The drilling method shall include measures to prevent borehole caving and the drill hole shall be completely flushed and cleaned to remove cuttings before casing installation. The inclinometer casing bottom end of which fixed with the bottom cap shall be centered in the borehole to allow the backfill to completely surround and support the casing. The installation shall be carried out so that the casing shall be subjected to minimum distortion. Prior to backfilling, the casing shall be oriented so that a pair of grooves is in the expected direction of ground movement. The backfilling material shall be non-shrink grout. The borehole and inclinometer casing shall be made as vertical as possible to minimize reading errors. The guide casing grooves shall be kept clean during the installation process to avoid potential probe-tracking problems. After backfilling top cap shall be fixed on the casing.

In-place inclinometer Installation

In-place inclinometers shall be installed once the zone(s) of movement has been identified and confirmed by the Engineer through check boring and verified through monitored data from insertion type inclinometer data at the site at least for a period of one rainy season. The installation of casing shall follow the installation process specified for insertion-type inclinometer casing.

The casing should be installed with one set of the grooves aligned towards expected direction of movement.

Water Level Gauge Installation

Once the drilling works are completed, perforated PVC pipe and water level gauge shall be installed into the boreholes as denoted in Figure 1301-4.

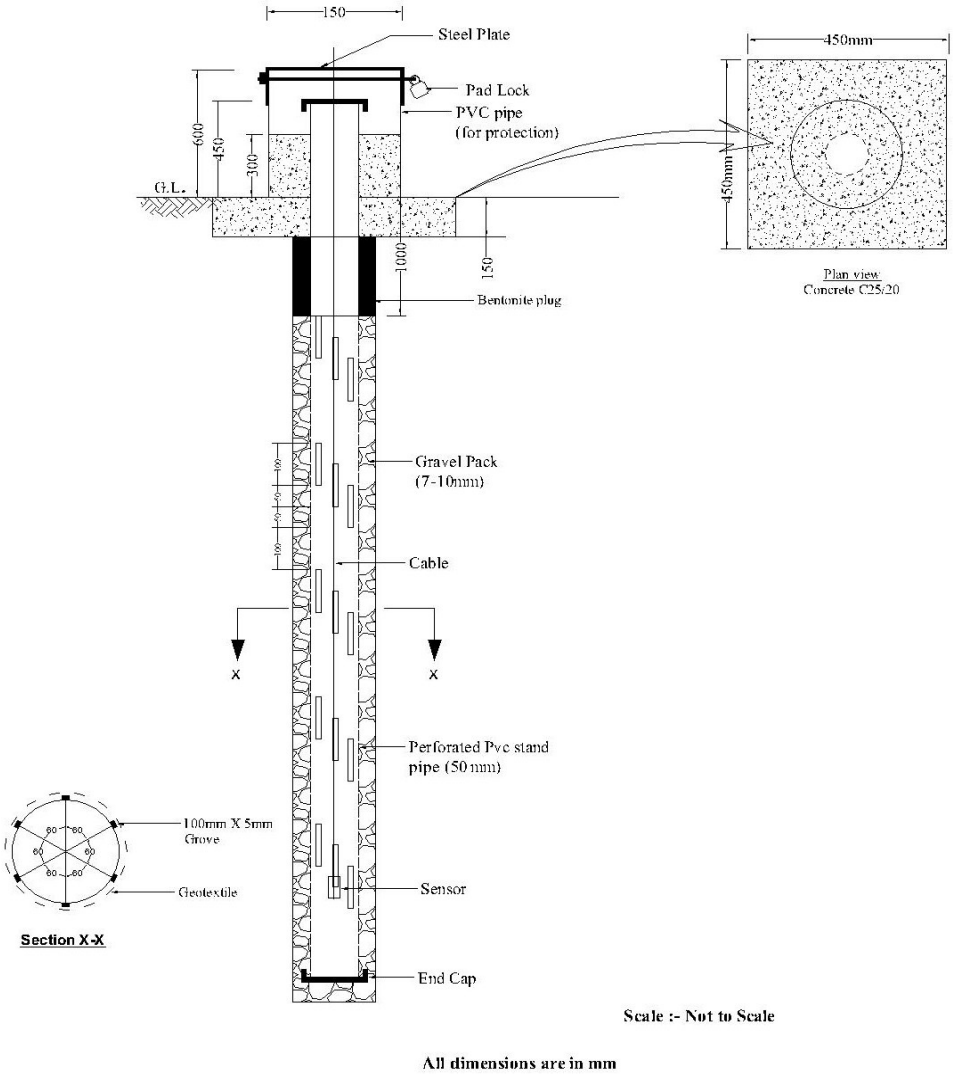

Figure 1301-4: Groundwater level gauge (Design view)

Piezometer Installation

After the drilling works are completed, Piezometer shall be installed into the boreholes as denoted in Figure 1301-5. Method of installation shall be as instructed by the Engineer at the site.

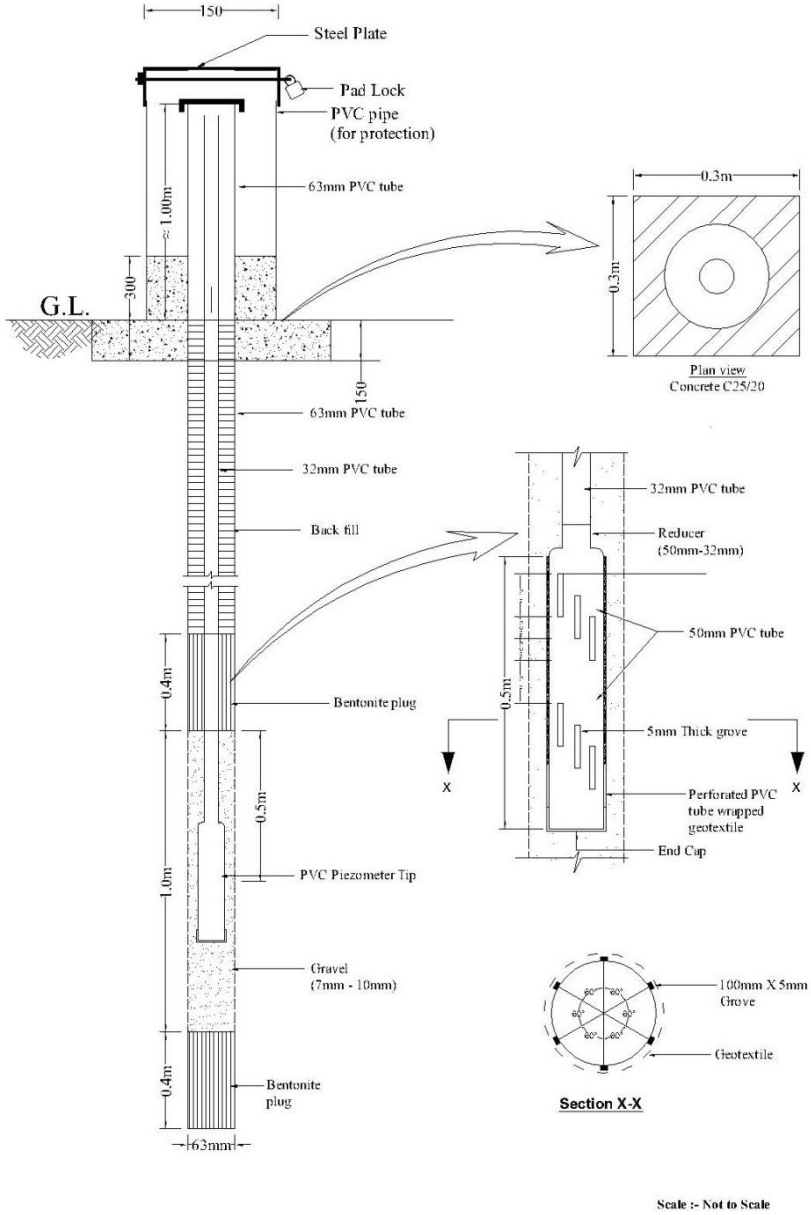

Figure 1301-5: Piezometer (Design View)

Extensometer Installation

The extensometer head shall be securely installed on concrete footings on relatively stable ground or rock formation proposed by the Engineer. The extensometer steel cable shall be drawn from the meter head end to a pole mounted on concrete footings on the landslide susceptible soil (tail end). The wire section in between the stationary head end of extensometer and the unstable tail end shall be adequately supported to eliminate cable sag. The supporting points may be equipped with pulley arrangement for friction free movement of cable.

The cable shall be protected with a suitable protective cover to prevent damage and vandalism as approved by the Engineer.

Rain Gauge Installation

The Supplier shall conduct a site survey in order to plan to install the rain gauge and propose the accurate location of installation to the Engineer for his approval. The site survey shall be carried out giving due consideration to the following factors. The place to install shall be outside of the landslide mass. Land use plans shall have to be checked in order to avoid possible relocation in the future. The selected place shall be a safe place where maintenance and inspection are easy to perform. The rain gauge shall be isolated from buildings, trees and other observation stations as much as possible. The instrument shall have to be isolated from the nearest obstacle by at least four times the height of the obstacle.

1301.4 Measurement and Payment

a. Measurement

Instrumentation shall be measured as the number of instruments / automated centralized real time landslide early warning systems / hazard warning alarm posts satisfactorily provided, installed, maintained throughout the Contract period.

b. Payment

The quantities determine for instruments as provided above shall be paid for at the Contract unit rate which price shall be full compensation for all labour, materials, tools and incidentals necessary for completion of the work including supply of instruments, installation, assembling and fixing. All rates for installation of instruments under Section 1301 shall further include the mobilization cost of all necessary plant/equipment and cost of data transmission.

The Pay Items and Pay Units shall be as follows:

Pay Item	Description	Pay Unit
1301(1).a	Supply and Installation of Insertion Type Inclinometer with required accessories and auxiliary components (including (insert number) probes, data loggers and 50m cables)	Number
1301(1).b	Supply and Installation of (insert number) In-place Inclinometer sensors with required accessories and auxiliary components	Meters
1301(1).c	Supply and Installation of (insert number) data loggers for in-place inclinometers	Number
1301(2)	Supply and Installation of Automated Tipping Bucket Rain gauges system with Accessories	Number
1301(3)	Supply and Installation of Extensometer	Number
1301(4).a	Supply and Installation of Ground water level Gauges	Number
1301(4).b	Supply and installation of piezometers	Number
1301(4).c	Supply and Installation of Data Logger including solar panel, battery backup and other necessary accessories.	Number
1301(5)	Installation of hazard warning alarm posts with solar panel, battery backup and other accessories at given locations	Number
1301(6).a	Supply and Installation of wired Long-Range Night Vision Cameras including necessary accessories including mounting pole and protective fence	Number
1301(6).b	Supply and Installation of wireless Long-Range Night Vision Cameras including necessary accessories including mounting pole and protective fence	Number

1302 LANDSLIDE WARNING SIGN BOARDS

The Supplier shall supply and install two warning boards at locations instructed by the Engineer at the site. Face plate size not less than 3.5 m by 2.5 m shall be erected on triple post supports with concrete foundations. The board shall be made of galvanized steel of gauge 18. The board shall be erected with the bottom of the board at a minimum of 2.3 m above the adjacent ground and clear of motor traffic. The text to be displayed will be decided by the Engineer. The Engineer shall issue to the Supplier the text, letter sizes, and details.

1302.1 Measurement and Payment

a. Measurement

Supplying and installation of landslide warning signboards shall be measured as the number of boards satisfactorily provided, installed, maintained throughout the Contract period.

b. Payment

Payment shall be made at the stated unit rate per signboard. The price shall be full compensation for all materials and labour required to perform the work described.

Pay Item	Description	Pay Unit
1302(1)	Supply and installation of Landslide Warning Signboards	Number

1303 MONITORING

1303.1 Period and Frequency of Monitoring

Period of monitoring work is the maintenance period according to the Contract. However, the monitoring work will be initiated by the Supplier with the supervision of the Engineer right after the installation of instruments is completed. The work will be undertaken by the Client after the maintenance period. The data shall be collected from all non-automated monitoring equipment once a month during dry seasons and twice a month during rainy seasons.

1303.2 Collection of Data

The Engineer shall instruct the relevant party regarding the procedure of the monitoring.

1303.3 Arrangement of the Collected Data

The Supplier shall arrange the data collected into tables and graphs with the use of specific software.

1303.4 Maintenance of the Equipment

The monitoring devices shall be regularly cleaned and checked for continuous and smooth functioning of data recording by the Supplier.

1303.5 Measurement and Payment

No separate payment shall be made for compliance of items under this section. Payments shall be deemed to be included in the Supplier's rates and prices under Section 1301 .

APPENDIX A CONSTRUCTION MANAGEMENT AND STAFF

The Contractor seek the Engineer's approval to employ following key personals for construction management staff and technical supervisory staff with required qualifications as specified in the Bidding document and accordance with these Specification. Without prior notice to the Engineer, the Contractor can't transfer / terminate any Key Staff personal from the site.

Item No.	Position/specialization	Number of Persons required	Relevant academic qualifications	Minimum years of relevant work experience
1	Project Manager / Contractor's representative	01	B.Sc. in Civil Engineering degree or equivalent, together with either Chartered/Corporate Membership of a recognized professional institution or a Postgraduate Degree in Engineering.	Minimum 8 years of post-qualification experience, of which a minimum of 3 years should be in slope stabilization work.
2	Geotechnical Engineer	01	B.Sc. Civil / Earth Resource Engineering degree or equivalent	Minimum 03 years of post qualification experience, of which minimum 1 year should be in slope stabilization work.
3	Site Engineers	01	B.Sc. Civil Engineering degree or equivalent with Associate Membership of IESL and Associate Membership of ECSL.	Minimum 03 years of post qualification experience, of which minimum 1 year should be in slope stabilization work.
			NDT/NDES/HNDE Civil or equivalent with the certificate of Member of IIESL and ECSL Registration as an Incorporate Engineer.	Minimum 10 years of post qualification experience, of which a minimum of 1 years should be in slope stabilization work.
4	Technical Officer	02	NDT/NDES/HNDE/NCT(NVQ-5) Civil or equivalent	Minimum 01years of post qualification experience
5	Surveyor	01	Bachelor Degree of Surveying from a recognized university or Licensed Surveyor or equivalent	Minimum 02 years of post qualification experience
6	QA/QC Engineer	01	B.Sc. Civil Engineering degree or equivalent	Minimum 03 years of post qualification experience, of which a minimum of 03 years experience in QA&QC Works, and 01 year should be in slope stabilization work.
			NDT/NDES/HNDE Civil or equivalent with the certificate of Member of IIESL and ECSL Registration as an Incorporated Engineer.	Minimum 10 years of post qualification experience, of which a minimum of 06 years of experience in QA&QC Works, and 01 year should be in slope stabilization work.
7	Quantity Surveyor	01	B.Sc. degree in Quantity Surveying or equivalent	Minimum 01 year of post qualification experience in Quantity Surveying

Item No.	Position/specialization	Number of Persons required	Relevant academic qualifications	Minimum years of relevant work experience
			NVQ Level 06 in Quantity Surveying or equivalent	Minimum of 05 years of post-qualification experience, out of which 03 years as a Contractors Quantity Surveyor.
			NVQ Level 05 in Quantity Surveying or equivalent	Minimum of 08 years of post-qualification experience, out of which 03 years as a Contractors Quantity Surveyor.
			NVQ level 04 in Quantity Surveying or equivalent	Minimum of 10 years of post-qualification experience, out of which 03 years as a Contractors Quantity Surveyor.
8	Environmental & Social Officer	01	B.Sc / BA. degree in a related area or equivalent	Minimum of 03 years of post qualification experience in the environmental & social field.
9	Health & Safety Officer	01	B.Sc / BA. degree in a related area or equivalent	Minimum of 3 years of post qualification experience in Health & Safety
			NVQ level 06	Minimum of 5 years of post qualification experience in Health & Safety
			NVQ level 05	Minimum of 8 years of post qualification experience in Health & Safety
			NVQ level 04	Minimum of 10 years of post qualification experience in Health & Safety

APPENDIX B RERERENCED DOCUMENTS

ICTAD SPECIFICATIONS

SCA/5 Standard Specifications for Construction and Maintenance of Roads and Bridges

AMERICAN CONCRETE INSTITUTE

ACI 506R-05 Guide to Shotcrete

ROADS AND MARITIME SERVICES SPECIFICATIONS

RMS R64 Soil Nailing

RMS R40 Horizontal Drains

RMS R63 Geotextiles

RMS R68 Shotcrete Work without Steel Fibers

ENVIRONMENTAL, SOCIAL, HEALTH AND SAFETY (ESHS) REQUIREMENTS

2000 Environmental, Social, Health & Safety Requirements

2001 Environmental and Social Policy

2001.1 Suggested Content for an Environmental and Social Policy (Statement)

The Works' policy goal, as a minimum, should be stated to integrate environmental protection, occupational and community health and safety, gender, equality, child protection, vulnerable people (including those with disabilities), sexual harassment, gender-based violence (GBV), sexual exploitation and abuse (SEA), HIV/AIDS awareness and prevention and wide stakeholder engagement in the planning processes, programs, and activities of the parties involved in the execution of the Works. The Client is advised to consult the AIIB to agree with the issues to be included which may also address: climate adaptation, land acquisition and resettlement, indigenous people, etc. The policy should set the frame for monitoring, continuously improving processes and activities and for reporting on the compliance with the policy.

The policy shall include a statement that, for the purpose of the policy and/or code of conduct, the term "child" / "children" means any person(s) under the age of 18 years.

The policy should, as far as possible, be brief but specific and explicit, and measurable, to enable reporting of compliance with the policy and reporting requirement.

As a minimum, the policy is set out to the commitments to:

1. apply good international industry practice to protect and conserve the natural environment and to minimize unavoidable impacts;
2. provide and maintain a healthy and safe work environment and safe systems of work;
3. protect the health and safety of local communities and users, with particular concern for those who are disabled, elderly, or otherwise vulnerable;
4. ensure that terms of employment and working conditions of all workers engaged in the Works meet the requirements of the ILO labour conventions to which the host country is a signatory;
5. be intolerant of, and enforce disciplinary measures for illegal activities and to be intolerant of, and enforce disciplinary measures for GBV, inhumane treatment, sexual activity with children, and sexual harassment;
6. incorporate a gender perspective and provide an enabling environment where women and men have equal opportunity to participate in, and benefit from, planning and development of the Works;
7. work co-operatively, including with end users of the Works, relevant authorities, contractors and local communities;
8. engage with and listen to affected persons and organizations and be responsive to their concerns, with special regard for vulnerable, disabled, and elderly people;
9. provide an environment that fosters the exchange of information, views, and ideas that is free of any fear of retaliation, and protects whistleblowers;
10. minimize the risk of HIV transmission and to mitigate the effects of HIV/AIDS associated with the execution of the Works;

The policy should be signed by the senior manager of the Client. This is to signal the intent that it will be applied rigorously.

2002 Environmental and Social Monitoring

2002.1 General

The Contractor shall, during the whole period of project should comply fully with National Environmental Protection laws and those pertinent to prevent nuisance to public stipulated by the Democratic Socialist Republic of Sri Lanka and the Environmental and Social Policy of the Asian Infrastructure Investment Bank. This obligation shall extend to the construction sites themselves and all of the Contractor's installations else ward within the national territories.

The Contractor shall take all reasonable steps to protect the environment on and off the Site and to avoid damage or nuisance to persons, private and/or public properties or others resulting from pollution, noise, vibration or other causes arising as a consequence of his methods of operation. The Contractor should be fully aware with the implementation of Environmental and Social Management Plan (ESMP), and the pollution control facilities should be installed adequately and appropriately before commencement of the project actions where there is potential to emit pollutants to the environment.

The project activities during site preparation, construction and post construction should comply with but not limited to the National Environmental Act (NEA) No. 47 of 1980 and amended Act No.1562/22 of 2008 with respect to emission of gaseous, liquid and solid waste, National Environmental Noise Control Regulations No.01 of 1996 for emission of noise, Interim Standards on Vibration Pollution control for Central Environmental Authority (CEA) for vibration during construction activities, Fauna and Flora Protection Ordinance (FFPO), Forest ordinance and Forest (Amendment) Act No.65 of 2009 (FO), Antiquities Ordinance No. 4 of 1940 and subsequent amendment; Ordinance to provide better preservation of the antiquities of Sri Lanka, and the sites, buildings of the historical or archeological importance in Sri Lanka, Felling of tree (Control) Act No 09 of 1951, and Soil Conservation Act No. 24 of 1996, Geological Surveys and Mines Bureau (GSMB) Act No.33 of 1992 amended by No.66 of 2009 for excavated material (earth, rubble and aggregates), National Involuntary Resettlement Policy if any private land is impacted as relevant.

Construction contractors' requirement to comply with site-specific environmental, social management and health and safety standards during the construction phase is annexed to this document. The contractor is expected to address all sections of the ESMP adequately with the indicated level of relevance in his bid response by referring to the given information on the site.

The Engineer, under any terms, is not responsible either fully or partly for damage caused by the Contractors' failure to apply necessary pollution control measures, environmental protection measures or measures to minimize nuisance to the public. The Engineer will not appear in courts, pay compensation, or engage in public conflict resolution on behalf of the Contractor under such situations if they arise.

The Contractor shall prepare and submit to the Engineer for review and approval **a Site Specific "Environmental and Social Management Action Plans (SS-ESMAP)**" based on the Contractors' Environmental and Social Management Plan (C-ESMP) **to the Engineer within 28 days from the Letter of Acceptance.**

- The SS-ESMAP should include proposals to mitigate all the Environmental and Social risks identified in Table 2, section 2004, in addition to the proposals for section 2002.2 (ESMP).

Information for preparing SS-ESMAPs. Pl. refer section 2004

The Contractor shall appoint a qualified and experienced Environmental and Social Officer for each package, whose duties throughout the period of the Contract shall be exclusively connected with the Environmental and Social Management activities at the Site. At each site someone has to be responsible for day-to-day environmental and Social issues.

Monthly ESMP performance reports should be prepared and submitted; on-site checklists and log books and grievance logs for workers should be maintained.

The ESMP implementation and the costs should be included clearly according to the format given under "**Payment schedule".**

2002.2 Environmental and Social Management Plan (ESMP)

The Environmental and Social Management Plan (ESMP) prepared for the project outlines the framework for planning, implementation and monitoring of environment, measures required to ensure that potential adverse environmental impacts from the project activities are eliminated, offset, or reduced to an acceptable level. At the same time, it is expected that the plan will help the project to enhance environmental benefits from the project interventions. The ESMP is based on the relevant existing national policies, legislation, regulations and guidelines and on the Environmental and Social Framework and standards of the AIIB.

a) All works should be arranged to cause the least possible disturbance to the environment and local residents/institutions, in particular to prevent soil erosion along the area of intervention and any access roads that may be required and adjacent area, to the river/stream banks, irrigation canals and other water ways. Similarly, cutting of trees, tea shrubs and other vegetation of economic, religious and ecological value found outside of the ROW, whenever possible be avoided; else replacement planting in a place selected by the owner of the affected tree and/or vegetation should be carried-out by the Contractor for the damages caused. In this regard initial survey of all houses, structures (drains, parapet walls, and etc) artifacts of cultural, religious or archeological importance, and environmental elements (vegetation, water ways) on or adjacent to the site that could potentially be affected by the works. The survey should be shared with the owner/occupants of the houses/ structures before any work takes place at the site. A follow- up survey should be carried out once the works have been completed and/ or at the request of the owner/occupants.

b) Proposals shall be submitted for:

1) Storage on Site

i. Materials and equipment on Site shall be stored in a manner so as to prevent damage to the Site and adjacent areas, and minimize hazards to persons, materials and equipment and all Temporary and Permanent Works. Storage areas shall be kept organized, neat and tidy.

ii. Areas assigned for carrying out Permanent Works shall not be used to store materials, plant and equipment, nor used as access to storage areas without prior approval of the Engineer.

iii. Hazardous materials (including fuel and oil) shall be stored and handled only within an area set-aside specifically for this purpose. This area shall be enclosed from the remainder of the Site with waterproof concrete flooring and rainproof roof, so as to contain any spillage, clearly marked and signs installed at a close distance from the storage area to warn unauthorized workers and visitors to stay away.

iv. The storage area shall be located away from any natural waterways, drainage lines and open drains. In case of petroleum fuel and oil, a collection basin is to be installed in the storage area to gather any spillages, to facilitate the recovery of the petroleum products for reuse or proper disposal using government licensed recyclers or otherwise.

2) Noise and Vibration

i. The Contractor shall abide by the Central Environmental Authority (CEA) regulations and other applicable laws and regulations related to noise and vibration levels.

ii. The Contractor shall take all practical precautions to minimize noise and vibration resulting from work under the Contract, especially in Sites adjacent to residential and institutional areas, from polluting such areas, and shall fit all equipment with noise suppressors so that noise levels are minimized. Similarly, as much as practicable, construction methods that produce minimal vibration should be adopted, most especially in sites adjacent to residential and institutional areas where possible damage to the structures due to vibration may occur.

3) Cracks and damages to the buildings/ road damages

i. The contractor shall take all practicable measures to prevent cracks in neighboring houses or buildings.

ii. In case of unconditional cracks, the contractor shall immediately inform the Engineer and repair the damage at their own cost.

iii. A crack survey should be done before work starts and after the work is completed

4) Disposal of waste

i. Solid, liquid, and gaseous waste shall be disposed of in accordance with relevant Sri Lanka Environmental regulations and contractual requirements.

ii. Non-toxic and/or non-hazardous liquid waste shall be stored in approved containers for transport and disposal at locations approved by the Engineer and local authorities.

iii. Non-toxic and/or hazardous solid wastes shall be disposed of by removal from the site, transport, and depositing in approved locations.

iv. Toxic and hazardous wastes must be temporarily stored using suitable containers at a designated place authorized by the Engineer and local authorities, and disposed of through a government-licensed collection agent or otherwise.

5) Disposal of Refuse

i. The Contractor shall take adequate measures to ensure that the Site and associated areas are maintained in a clean and orderly condition. Provision shall be made for the daily removal of rubbish, debris, surplus materials, etc., and for the stacking and storing of materials in authorized locations.

ii. The excavated materials should be covered and stored safely until removed. The location of onsite storage should be sufficiently away from stream banks, waterways, runoff paths, etc.

iii. All materials that are reusable or recyclable shall be used for such purposes either by the contractor or through dealers.

iv. The final disposal site should be approved by the Engineer before dumping. The disposed matter should not pollute water bodies.

v. The contractor shall obtain approval from relevant authorities such as Pradeshiya Sabha, Municipal Council and other government agencies (as required), for disposal of spoil at the specified location, as directed by the Engineer. Private land that will be selected for disposal should also require written consent from the landowner.

6) Dust Control

i. Dust screens and/or watering of open and unpaved areas shall be used to control dust and to eliminate public health issues and/or nuisance to adjoining residential and institutional areas, national highways often travelled by commuters, and natural habitats frequented by wildlife during the period of the Works.

ii. The on-site piles should be covered securely to prevent particles from becoming airborne.

7) Transport of construction materials and waste

i. Transportation of material should always be done covered using a tarpaulin

ii. Precautions should be made to prevent the spill of any material on the ground during transportation and minimize damage to ground cover/ vegetation

iii. Transportation of materials should not be a nuisance to the public

iv. Transportation should be done only on the dedicated haul roads. Use of any other access roads should be strictly avoided.

v. The tyres of the vehicles should be inspected regularly when leaving the sites and disposal site, and mud in tyres should be cleaned before entering the haul road. Contractor shall install a truck wash station at the site entrance/ exit (Consider spanning the cross-road ditch on the access road with a steel plate or aggregate to prevent migration of materials to off-site).

8) Water

i. **Water removal**

Surplus water shall be promptly removed from the Site by draining off or by mechanical means to keep the Works reasonably dry and so as not to interfere with construction work. The water removed from the Site is kept reasonably free of soil, oil/petroleum and other debris, and the discharge shall not adversely affect the adjoining landowner's residential and livelihood assets or pose a pollution hazard to waterways and farmlands.

Temporary drainage solutions to be adapted for weep hole drainage, preventing the formation of muddy areas

ii. **Water quality**

The Contractor shall ensure that construction activities do not have a detrimental impact on the water quality of surface or ground water in the areas adjoining the Site. Specific measures shall be adopted to prevent the discharge of contaminated runoff from the Site. When necessary, potable water sources of local people, such as springs located immediately downslope of the Site, shall be provided with protection ("spring box") from contaminants originating from construction works as appropriate.

iii. **Contaminated water**

The Contractor shall adhere to the regulations of NEA on the disposal of wastewater. Wastewater shall not be discharged to the ground or waterways in a manner that will cause unacceptable surface as ground water pollution.

iv. **Siltation**

All drains, streams, and waterways shall be kept clear from mud, silt and other obstructions arising from the execution of work under the Contract. Soil and other debris removed from the drains, streams, and waterways are to be deposited by the Contractor in suitable areas subject to the approval of the Engineer and the concerned local authorities. The Contractor shall ensure that effective construction practices are employed to minimize siltation to the satisfaction of the Engineer.

v. **Alternation of drainage paths**

Contractor shall not close or block existing canals and streams permanently, causing a nuisance to the public. If diversion or blocking of canals and streams is required for the execution of works, the Contractor must obtain the Engineer's approval and the approval of relevant authorities where necessary.

a. If streams or waterways/ community water supplies that are used by neighboring communities are obstructed even temporarily, it should be done with the approval of the Engineer, subject to consent from the community, with alternative sources arranged.

b. Contractor shall restore drainage paths back to their original status once the need for such diversion or closure, or blockage no longer exists.

9) Flora and Fauna

All works shall be carried out in a manner so that the destruction to flora and fauna and their habitat is minimal. Trees and vegetation shall be felled /removed only if they are directly on permanent works or necessary temporary works.

i. Contractor shall make every effort to avoid removal/ destruction of religious, cultural, and aesthetic species.

ii. Contractor shall adhere to the regulations of the Fauna and Flora Protection Ordinance (FFPO) and the Forest (Amendment) Act No.22 of 2009, Forest ordinance Forest (Amendment) Act No.65 of 2009 (FO) and pertaining to the relevant area declared under the Central Environmental Authority or Mahaweli Authority of Sri Lanka if any with regard to felling of trees and removal of vegetation.

iii. A list of trees to be removed during the construction of site to be marked and forwarded to the Engineer.

iv. Measures shall be taken to avoid or minimize any adverse impacts on fauna and flora (either terrestrial/ aquatic) living in natural environments adjacent to the Site during the construction period.

v. During construction, if a rare/ threatened/ endangered flora and or fauna is found, it shall be immediately reported to the Engineer. All activities that could destroy such flora/fauna and its habitat shall be stopped with immediate effect. Contractor shall carry out works again only after the Engineer's approval.

vi. Hunting and collection of wildlife and specimens within the Site and adjacent area are strictly prohibited. The Contractor shall ensure that no damage occurs to any trees, shrubs, and other vegetation with ecological, spiritual, and/or economic value that are to be retained at the Site; and that none of its workers and subcontractors are engaged in wildlife hunting or collection.

vii. Contractor shall take measures to avoid the introduction of invasive species during transportation or refuse or spoil.

viii. Plant or seed, if needed for bio-engineered slope mitigation, shall be imported into Sri Lanka under the authority and in accordance with the conditions of a plant importation permit issued by the Additional Director, National Plant Quarantine Service, Katunayake, for the Director General of Agriculture under the Plant Protect Act No. 35 of 1999.

ix. Approval from the Department of Forest or Wildlife should be taken before introducing plants to the site for vegetative mitigatory measures.

10) Physical and cultural resources

During construction activities, the contractor should take all necessary and adequate care to minimize impacts on cultural properties, which include cultural sites and remains, and places of worship.
Whenever chance finds are made during the works, the contractor will immediately inform to the Engineer and in turn inform the government department concerned with cultural property.

11) Works in an archaeological site

All fossils, coins, articles of value of antiquity and structures and other remains or things of geological or archaeological interest etc. discovered on the site and/or during construction work shall be the property of the Government of Sri Lanka, and shall be dealt with as per provisions of Antiquities Ordinance of 1940 (Revised in 1956 & 1998).
The contractor shall take reasonable precaution to prevent his workmen or any other persons from removing and damaging any such article or thing and shall, immediately upon discovery thereof and before removal acquaint the Engineer of such discovery and carry out the Engineer's instructions for dealing with the same, awaiting which all work shall be stopped within 100m in all directions from the site of discovery.

If directed by the Engineers the Contractor shall obtain advice and assistance from the Department of Archaeological of Sri Lanka on conservation measures to be taken with regard to the artefacts prior to recommencement of work in the area.

12) Soil Erosion

The Contractor shall take measures to minimize the soil erosion that may result from construction activities using any of the following suitable control measures. Control measures include but not limited to.

i. Mitigation works involved with site clearance, slope reshaping, excavation and removal of debris etc. should be avoided during rainy season. Site works in upslope mitigation are carried out in the dry season and such activities are avoided in the upslope area in the wet season as much as possible.
ii. Excavated areas should be covered to prevent erosion and infiltration.
iii. Install sediment filter, fences, hay bale filters, drains, and filter strips, grass outlets, sediment transport basin traps around culverts, drains, soil stockpiles and all other areas which may have the potential to erode or be affected by soil erosion.
iv. Install catch drains, slope drains, and nearby dissipators in conjunction with sediment traps installed to divert stormwater around the Site.
v. Stabilize by seeding/strawing, mulching and/ or secure placement of plastic traps (excluding pavements and screenings) stockpiled for periods longer than one month.
vi. Stabilize disturbed areas using measures such as drains.
vii. Minimize as much as practicable the removal of existing vegetation within and around the project area at any time.
viii. Plan the execution of work under the Contract in stages to minimize soil erosion during continuous periods of rainfall that will cause heavy run-off.
ix. Soil erosion control devices shall be regularly inspected and maintained, especially after heavy and/or continuous periods of rain.

13) Soil Contamination

The Contractor shall undertake all practicable control measures to prevent the contamination of the soil in and around the site. Control measures include, but are not limited to;

i. **Acceptance of Clean Fill.**
All fill material to be imported and used on the Site shall be free of contamination.

ii. **Fuel Chemicals and Other Hazardous Materials**
All practicable steps shall be taken to ensure contamination of soil does not occur through: fueling, maintenance of vehicles or equipment; storage of fuel, chemicals, and other

hazardous materials; and spillage of such materials on to the soil, by ensuring all the above activities are conducted in bounded or sealed areas.

iii. **Clean-up of Soil Contamination**

All soils contaminated during construction shall be cleaned up by the Contractor to the satisfaction of the Engineer, and at no cost to the Employer.

Any contaminated spoil material (whether or not contaminated by the Contractor) shall be removed from the Site in an approved manner to prevent further pollution.

iv. **Installation of Oil separators**

Contractor shall install oil separator to prevent fuel, oil and other petroleum products from spilling into the existing drainage lines and then into the adjacent soil, resulting in its (soil) contamination.

14) Borrowing Earth

i. Earth available from construction site excavation works as per design, may be used as embracement materials, subject to approval by the Engineer

ii. Contractor shall comply with environmental requirements/ guidelines issued by CEA and the respective local authorities with respect to the locating of borrow areas and with regard to all operations related to excavation and transportation of earth from such sites.

iii. Contractor can also find suitable soil materials from currently operated licensed borrow pits in the surrounding area, subject to approval of the Engineer.

iv. Borrow areas shall not be opened without having a valid mining license from the Geological Survey and Mines Bureau (GSMB).

v. All borrow pits/areas should be rehabilitated at the end of their use by the contractor in accordance with the requirement/ guidelines issued by the CEA and the respective Government Authority

15) Quarry operations

i. Utilizing the existing quarry sites available in the project influential area as much as possible, which are approved by GSMB with a valid Environmental Protection License (EPL) and Industrial mining license

ii. If new quarries are to be opened, prior approval should be obtained from GSMB, NBRO (as applicable), CEA, and Local authorities.

iii. Selected quarry sites should have proper safety measures, such as warning, safety nets, etc.

iv. Quarry sites should not be established within protected sites under FFPO and FO.

16) Maintenance of vehicles and machinery

i. All maintenance and servicing should be done outside the site.

ii. Waste clothes, wrappings, waste machine oil, rugs, etc. should be collected separately and disposed of outside through proper disposal channels

iii. Operation of concrete mixer

Storage of construction materials, cement, sand, concrete aggregates, and any other materials should be done in a dedicated place closer to the concrete mixture yard. Materials prone to wash off or airborne would be covered with impervious material.

iv. Separate places should be kept for cleaning concrete mixers away from stormwater drains. Cleaning should be done with a minimum quantity of water, and wastewater generated should be allowed to soak into the ground. If extra wastewater is generated, the drain water should be filtered through check dams and temporary sand mounds before letting to storm water drains.

17) Disruption to the public

i. Loss of Access
At all times, the contractor shall provide safe and convenient passage for vehicles, pedestrians and livestock.

ii. Work that affects the use of existing accesses shall not be undertaken without providing adequate provisions to the prior satisfaction of the Engineer.

iii. On completion of the works, all temporary obstructions to access shall be cleared away, all rubbish and piles that obstruct access be cleared to the satisfaction of the Engineer.

iv. Contractor shall make sure that his work team or project actions shall not engage in any form of dispute with neighboring persons or communities under the Nuisance Ordinance chapter 230 No. 15of 1862 of Sri Lanka. All contractors' and subcontractors' personnel should act courteously and treat people living in the neighborhood with respect.

v. The contractor shall employ a female officer to coordinate safety at all the sites related to girls' schools

vi. Consultation with project-affected people associated with the sites should be done frequently

18) Utilities and roadside amenities

i. The Contractor shall take care not to damage/destroy or affect the functional purposes of utilities such as water, electricity, and telephone posts, roads, and roadside amenities and etc.

ii. In case of unintentional damage caused to a utility, the Contractor shall immediately inform the service providers and help to restore the service without delay at its own cost.

19) Visual environment enhancement

i. Landscape plantations, re-vegetation, and filling slopes and other slopes, edge treatment of water bodies shall be carried out.

ii. The Contractor shall remove all debris, piles of unwanted earth, spoil material, away from the roadsides and from other work places and dispose at designated locations acceptable to the Engineer. iii. On completion of the works, the temporary structures shall be cleared away in full, all rubbish burnt, waste dumps and septic tanks shall be filled and closed, and roadsides, workplaces, and labour camps shall be cleared and cleaned.

20) Special attention during works in an archaeological site

The contractor shall aware on importance all potential damage to the archaeological site. Whenever chance finds are made during the works, the contractor shall immediately inform to the Engineer.

21) Labor Management

The contractor shall take all necessary steps to;

i. Fair treatment, nondiscrimination, and equal opportunity for project workers.
ii. Protect project workers, including vulnerable workers such as women, persons with disabilities, children and migrant workers, contracted workers, community workers and primary supply workers, as appropriate.
iii. Prevent the use of all forms of forced labor and child labor.
iv. Support the principles of freedom of association and collective bargaining of project workers in a manner consistent with national laws.
v. Provide project workers with accessible means to raise workplace concerns.

22) Protection of school children, women in an educational institute, public gatherings (religious place)

22.1 Following should be established

i. Define the project activity zone beyond which workers cannot enter into the institute
ii. Adequate no entry/danger signs and monitoring should be established so that school children/ learners are not permitted in the project area
iii. Workers cannot use sanitary facilities without approval from the respective Heads of Institution
iv. The contractor should not use children/ learners for any form of project-related work (direct/indirect)
v. Establish a system of vigilance to monitor the behaviour of the workforce and the movement, and address immediately any dispute that would arise during the construction phase
vi. Ensure that a strict code of conduct in the worksite is maintained. They include No alcohol, no smoke, indiscipline noisy behaviour, any form of sexual abuse with female learners/ devotees (in a religious place).
vii. Proper awareness, education, monitoring, and punishing of labourers
viii. The heavy machinery operators should be extremely cautious in the operation of machinery as possible accidents will be high.
ix. Full-time watchmen should be kept in the risk area to ensure safe movement of heavy machinery and vehicles
x. The electrical wiring systems and layout should be done with proper safety measures approved by the Project Management Unit (PMU) to ensure that accidents mainly to children from electric shocks are prevented
xi. Parking and storage areas should be done in approved locations by the PMU

xii. Working hours

a. The construction activities should be in accordance with the institution's management.
b. Noise, vibration, and dust generation activities should be carried out after teaching hours
c. During exam times disturbing (noise and vibration) activities are not allowed.
d. Night-time operations are allowed only during non-teaching periods (school vacations)
e. If night time operations are required to achieve project targets such works should be carried out with adequate safety measures and consent from the Institutions' management.

2002.3 Environmental and Social Management Action Plan (ESMAP)

i. The selected Contractor shall prepare and submit to the Engineer for review and approval, the "Site Specific Environmental and Social Management Action Plans (SS-ESMAP) based on the Contractors' Environmental and Social Management Plan (C-ESMP) that shall be implemented during the work execution, and shall be monitored on a daily basis. The

Contractor shall take into account the regulations and all applicable Local Government by-laws in the preparation of the SS-ESMAPs.

ii. The SS-ESMAP should include proposals to mitigate all the Environmental and Social risks identified in Table 2 section 2004 in addition to the proposals for section 2002.2 (ESMP).

iii. The directions on preparing SS-ESMAPs will be given by Environmental consultant of the Engineer for selected Contractor. The Contractor should submit the SS-ESMAP statement to the Engineer within 28 days from the date of signing the contract and prior to commencing construction.

iv. The contractor shall not commence the work until the resettlement plan is established.

2002.4 The Contractor's Environmental and Social Officer

(a) 28 days from the Letter of Acceptance, the Contractor shall appoint a qualified and experienced Environmental and Social Officer, whose duties throughout the period of the Contract shall be exclusively connected with the Environmental Management activities as per ESMP. At each site, someone has to be responsible for day-to-day environmental and Social issues.

The appointment and designation of the Environmental and Social Officer shall be subject to the Engineer's approval.

The Environmental and Social Officer shall have an acceptable working knowledge of the ruling language of the Contract as stated in the Conditions of Contract, and shall be a suitably qualified and experienced person who shall prepare, supervise and monitor environmental management activities. The person should be responsible for community liaison and to handle public complaints regarding environmental/social related matters.

The Environmental and Social officer from contractor should be presented at site and responsible for execution of ESMP and monitoring project actions in respect of environmental compliance and giving necessary instructions at site to ensure satisfactory implementation of ESMP.

Unless specifically agreed in writing by the Engineer, the Contractor shall not undertake any work on the Contract, which may affect the environment, until the Environmental and Social Officer has commenced duties Package, and the Site Specific Environmental and Social Management Action Plans (SS-ESMAP) have been approved by the Engineer.

The Contractor shall not remove the Environmental and Social Officer from the Contract, without a written permission of the Engineer. Within fourteen (14) days of any such removal, or notice of intent of removal, the Contractor shall nominate a replacement Environmental Officer for the Engineer's approval.

2002.5 Environmental Monitoring

The contactor shall monitor the compliance of implementation of Environmental Management actions and the emission of pollutants with respect to the environmental regulations. The contractor shall include the monitoring plan in his SS- ESMAP. The monitoring plan should be prepared in accordance with the monitoring regulations of National Environmental Act and that of the funding agency, and any other specific monitoring indicated in Environmental Assessment reports (EIA, IEE) as appropriated. The environmental monitoring plan should be approved by the Engineers.

The Contractor shall monitor the environmental aspects of the construction according the environmental monitoring plan, and control measures shall be implemented to minimize the environmental impacts. However, should the control measures put in place be found to be unsatisfactory as a result of monitoring, then the Contractor shall amend the control measures to provide a satisfactory result.

a) The contractor shall:

i. Prepare monthly and quarterly progress reports in three copies on the implementation of the ESMP using a report format acceptable to the Engineer.
ii. Participate in coordination meetings called by the Engineer to discuss the progress of the ESMP implementation, among others, and act on agreements reached during the activity.
iii. Participate in Site Inspections requested by the Engineer, and/or the NBRO, and Authorities (RDA, Railway Department) to review the ESMP performance.
iv. Keep daily records of environment related incidents (if any), note the details, actions taken, identify persons responsible for these actions, the results of the actions, and any recommendations for further work. Also indicate in the record if the Engineer had been informed of the incidents as well as other local authorities. Complaints and their status will also be included in the record.

b) Monitoring environmental parameters for regulations for pollutant emissions

i. The contractor shall monitor the environmental parameters for regulations for pollutant emissions. The monitoring parameters should be decided based on the sensitive environmental elements within the project area and in its proximity. For this, the contractor should obtain the services of a competent local organization, to decide and conduct environmental monitoring as baseline and during construction for ambient air quality, surface and ground water quality, noise and vibration levels at the specific locations of the site.
ii. The monitoring agency shall review environmental data obtained for conduct baseline monitoring for parameters as per the Table 1. The monitoring agency shall prepare environmental quality monitoring reports with the results of field sampling and laboratory analysis, interpretations of the results and recommendations.
iii. And shall set out same monitoring stations for the monitoring during the construction period.
iv. The reports should be analyzed by the environmental consultants of the Engineer to ensure the effectiveness of the mitigation measures implemented, and that the necessary environmental regulations are complied, and non-compliances should be acted according to conditions of the contract.

Table 1 – Guidance to select Environmental Quality Monitoring Parameters

Activity	Instructions for contractor	Parameters	Frequency and monitoring Agency
*Baseline surveys	The contractor shall conduct a baseline environmental assessment for all sites before commencing the construction activities. The assessment should include Ambient Air quality, noise, vibration and water quality at closes streams (reflecting upstream and downstream) as compliance to: **Air quality** - The National Ambient Air Quality standards stipulated under the Extraordinary Gazette, No. 1562/22 August 15, 2008 -Central Environmental Authority of Sri Lanka. **Noise-** Extraordinary Gazette, No. 924/1- May 23, 1996 -Central Environmental Authority of Sri Lanka.	Air Quality parameters Carbon Dioxide (CO2), Carbon Monoxide (CO), SO2, NO_2, Total Suspended Particulate Matter (TSPM), Respirable Particulate Matter (PM10 & PM 2.5), Particulate Lead (Pb) **Noise** (15 min and 1 hour in Morning, Afternoon, Evening and Night in a day)	Once From a reputed laboratory

Activity	Instructions for contractor	Parameters	Frequency and monitoring Agency
	Vibration- The interim standards on Vibration for the Machinery, Construction activities and Vehicular Movements - Central Environmental Authority of Sri Lanka. **Ambient Water Quality-** Ambient water quality standards – CEA –EAIP-DHV-2000 **Crack surveys** should be conducted, if necessary, on existing buildings or structures before commencing the work by the contractor. The reports should be analyzed by the experts to identify	Leq, L90, L50 & L10 **Vibration** (Ground and Structural) PPV, Hz **Water quality parameters** pH, temperature, Electrical conductivity, DO, BOD, TSS, Oil and Grease, FC, Pb, and any other specific parameters deemed necessary Cracks in each building within 50 m from the site and any other structures in the vicinity that could potentially be affected. Cracks in the roads within 50 m from the site & roads used for material & machinery transportation with video evidence.	
	Cracks that might get aggravated by some project actions. And necessary precautions should be made during execution of project actions to keep to a minimum such possible aggravation of the cracks if identified sensitive to specific project actions.	by the landslide or by the works.	Once by contractor representative

Activity	Instructions for contractor	Parameters	Frequency and monitoring Agency
During construction	Ambient Air Quality, Noise, vibration, water quality Compliance to; **Air quality** - The National Ambient Air Quality standards stipulated under the Extraordinary Gazette, No. 1562/22 August 15, 2008 -Central Environmental Authority of Sri Lanka. **Noise-** Extraordinary Gazette, No. 924/1- May 23, 1996 -Central Environmental Authority of Sri Lanka. **Vibration**- The interim standards on Vibration for the Machinery, Construction activities and Vehicular Movements - Central Environmental Authority of Sri Lanka. **Ambient Water Quality**- Ambient water quality standards – CEA –EAIP-DHV-2000	Air Quality parameters Carbon Dioxide (CO2), Carbon Monoxide (CO), SO2, NO2, Total Suspended Particulate Matter (TSPM), Respirable Particulate Matter (PM10) & PM (2.5), Particulate Lead (Pb) **Noise** (15 min and 1 hour in Morning, Afternoon, Evening and Night in a day) Leq, L90, L50 & L10 **Vibration** (Ground and Structural) PPV, Hz **Water quality parameters** pH, Temperature, Electrical conductivity, DO, BOD, TSS, Oil and Grease, FC, Pb, and any other specific parameters deemed necessary	In critical noise and vibration monitoring activities From a reputed laboratory In critical events as directed by the Engineer
	Crack Surveys	Cracks in each building within 50 m from the site boundary representative	
Site inspections, Execution of ESMP	An Environmental and Social officer from the contractor should be presented at site responsible for execution of ESMP and monitoring project actions in respect of environmental compliance and giving necessary instructions at site to ensure satisfactory implementation of ESMP.		

Activity	Instructions for contractor	Parameters	Frequency and monitoring Agency
After completion of works	Crack Surveys	Cracks in each building within 50 m from the site and any other structures in the vicinity that could potentially be affected by the landslide or by the works. Cracks in the roads within 50 m of the site & roads used for material & machinery transportation with video evidence.	Once by contractor representative

2002.6 Environmental Complaints

The Contractor shall maintain a register of all environmental and social complaints received and shall notify the Engineer of each complaint. Complaints received by the Engineer shall be referred to the Contractor and shall be detailed in the complaints register.

The Contractor shall investigate all environmental and social complaints received and, where necessary, adopt measures to address the complaints. All measures undertaken to address the complaints shall be detailed in the register. A summary of the complaints received, actions taken, and the ensuing results, and further actions needed (if any) are to be included in the regular reports submitted by the Contractor to the Engineer.

2002.7 Environmental Incidents

Should an environmental incident (being an environmental nuisance, medium environmental harm, or serious environmental damage) occur during the construction phase, the Contractor shall immediately take appropriate action to minimize any impact or to compensate for the impact and inform the Engineer of the incident. The Contractor shall carry out any instructions received from the Engineer to remedy the situation. The Contractor is responsible for the clean-up of any contamination caused by construction work, and no additional payment will be made in this regard.

2002.8 Environmental Training

The Contractor shall be responsible for ensuring that all employees (including all Sub-Contractors and their employees) have received training/orientation in relation to the Contractor's Environmental and Social Management Plan (C-ESMP) and other related operating guidelines. Posters are to be placed in strategic places, and reading materials are to be made available to remind workers and visitors of how each one can, on a personal basis, help protect the environment. The Contractor will ensure that all machinery on the Site is operated within the appropriate guidelines in order to minimize environmental impacts related to excessive noise and vibration; deteriorated air and water quality; waste and pollution control; as well as damages to the natural ecology in and around the project area. All construction materials used in the Site shall be utilized in such a manner to minimize negative environmental impacts. Reusable containers no longer needed at the Site can be donated to the local schools or government units for use in their community development projects.

2002.9 Reporting and Maintenance of Records

a) Environmental and Social Management Action Plan (ESMAP)
The Contractor should prepare SS-ESMA Plans and obtain approval.

b) Monthly ESMP performance reports should be prepared and submitted
c) On-site checklists should be maintained and updated regularly
d) Logbooks should be maintained at the site with daily inspection entries, issues noticed, action taken, and provided to the Engineer during on-site inspections
e) Emission test reports and approvals, etc., should be made available to officers of the Engineer at on-site inspections

2002.10 Attending the Progress Meeting

The Engineer will hold a monthly progress meeting at a venue that will be either at the head office or at a pre-informed location in the proximity of the project site. An authorized officer responsible for ESMP, i.e., the Contractor's Environmental and Social Officer, should attend the meeting and should present the progress.

2002.11 Performance Monitoring by the Engineer

The Environmental, Social, Health, and Safety officer (ESHS officer) will be appointed by the Engineer to monitor performance of ESMP at site. The monitoring will include site inspections, checking on-site environmental records, reviewing ESMP, and raising non-compliances on ESMP where performance is - unsatisfactory. The ESHS officer of the Engineer will endorse log entries and on-site checklists, and will prepare monthly performance review reports including non-compliances and present at the progress meetings. All claims are subjected to approval of the EO.

2002.12 Measurement and Payment

a. Measurement

(i) Environmental and Social Officer shall not be measured and deemed to be included in the construction management staff as stated in Annex- B under section 120.1.
(ii) Environmental Management Action Plan and site arrangement before commencing the works shall be measured as a Lump Sum.
(iii) Baseline Environmental and Social Monitoring shall be measured as a lump sum.
(iv) ESMP Progress Reports shall be measured in the number of reports (not the number of copies) submitted as described above.
(v) Monitoring Environmental Quality parameters and Environmental Mitigation Measures during the construction period shall be measured as a Provisional Sum

b. Payment

(i) The Environmental and Social Officer shall not be paid, and all the expenditure incurred by the Contractor in keeping the personnel at the Site and all the facilities provided to such personnel to discharge his duties satisfactorily shall be deemed to be included in the Contractor's staff.
(ii) ESMP Progress Reports shall be paid at the Contract monthly rate and shall include all the expenditure incurred by the Contractor in preparing the reports (not the number of copies) in three copies and submitting them to the Engineer.
(iii) Environmental Quality Monitoring and Environmental Mitigation Measures shall be paid at the Contract as a provisional sum and shall include all the expenditure incurred by the Contractor in carrying out this work, and the Contractor and-Engineer shall agree on a payment of the provisional sum in a manner that the payment is distributed across the monitoring period.
(iv) Final payment of the Lump Sum shall be made upon submission of the Letter of Satisfaction of the Employer, after all rehabilitation works by the Contractor. No or partial payment shall be made for unsatisfactory performance.

(iv) All the other obligations of the Contractor under this Section are deemed to be included in the rates and no separate payment shall be made in respect of them.

- Submission of claims– All claims regarding the ESMP implementation are subject to the submission of reports followed by approval by the Engineer. The format for the claim form and authorized signatories should be informed prior to the commencement of the project. The incomplete claims or those with inadequate information will not be paid and the Engineer hold no responsibility for delays encountered in the submission of such claims. All claims are subjected to approval of the Environmental Officer (EO) certifying satisfactory performance. Full payment, no or partial payment or payment suspension will be based on the endorsement by the EO on the claims of the Contractor.

- If a large number of NCs are reported in the given month and are not rectified within the minimum time needed to address these issues, the unsatisfactory performance of the implementation of ESMP will lead to suspension of payments, disregarding the monthly report that has been submitted.

- **Performance of the environmental officer at the site and attending the progress meetings**– No or partial payment will be made, or payment will be suspended for unsatisfactory performance of the environmental officer of the contractor.

- **Performance of on-site ESMP**– No or partial payment will be made, or payment will be suspended for unsatisfactory performance

- **Suspend of work –** If the contractor is seriously violating the norms of environmental regulations, the Engineer reserves the right to suspend the project activities until satisfactory control measures are set in place. Under such situations, the Engineer will not pay any delay claims.

- **Damage Surcharge –** If substantial damage has resulted to the environment or the public due to contractor poor performance of ESMP **the contractor will have to remedy it at its own expense.** If the contractor is unable to repair the damage or there is an unacceptable delay in attending to remediation the Engineer reserves the right to deduct the specified amount from the payment as remediation cost.

Pay Item	Description	Pay Unit
2000 (1)	Submission of satisfactory Site Specific Environmental and Social Management Action Plans (SS-ESMAP) and on-site arrangement before commencing the project actions	Lump sum
2000 (2)	Baseline Environmental Monitoring and submission of the report	Lump sum
2000 (3)	ESMP Monthly Progress Reports	Month
2000 (4)	Monitoring Environmental Quality Parameters & Implementation of Mitigation measures	Provisional Sum
2000 (5)	Final payment upon submission of letter of satisfaction of the work by the Employer	Lump sum

2003 Working Conditions and Community Health and Safety

2003.1 General

The Contractor shall, as a priority in all its activities, undertakings and endeavors, ensure the continuous safety measures of the public and all persons directly or indirectly associated with the Works. The Contractor shall comply with all safety and industrial health legislation and regulations of Sri Lanka.

The Contractor will be responsible for the safety of the public legitimately passing through or adjacent to the Site. All excavations, use of explosives (chemical or other), or plant or items of potential danger to the public must be barricaded and signposted to the satisfaction of the Engineer, and the Contractor must provide sufficient watchmen to ensure the safety of the public at all times. All existing pedestrian routes shall be maintained in a safe condition unless an alternative route is provided to the satisfaction of the Engineer.

The contractor shall establish Emergency Response Procedures for sites located close to public places such as schools.

The Contractor shall appoint a Health and Safety Officer for each Lot, whose duties throughout the period of the Contract shall be exclusively connected with the Health and Safety Management activities at the Sites for workers and the community.

Availability of Safety-related Documents: The Contractor shall comply with the Engineer's requirements insofar as displaying in each of its site offices and workshops, copy of such safety and industry health posters and keeping on the Site copies of such regulations and documents. All regulations and documents shall be translated into languages that are understood by the workers and operators engaged by the Contractor or subcontractors, and such translations shall be displayed or kept alongside those in Sinhala, Tamil, and English languages.

Assistance to the Engineer: The Contractor shall provide full co-operation and assistance in all safety surveillance carried out by the Engineer or the Employer.

2003.2 Health and Safety Plan

(a) Submission, Approval and Change

i. Within 28 days from the Letter of Acceptance, the Contractor shall submit his Health and Safety Plan (HSP). The Contractor shall cooperate and comply with Engineer's instructions to have HSP approved by Engineer before the start of site works.

ii. The Contractor shall comply with the approved HSP and any of the Engineer's instructions on safety.

iii. If the Engineer makes any subsequent recommendation or instructions on the HSP in writing, the Contractor shall revise the HSP accordingly.

iv. Where the Contractor proposes to change, he shall give at least (7) calendar days' notice in writing. Proposed changes are subject to the Engineer's approval.

(b) **Contents of Health and Safety Plan**

Main contents of the Health and Safety Plan shall include the following:

i. **Safety Organization and Communication**

- Safety control staff organizational structure, which should identify the personnel to be engaged solely for safety assurance (including the Health and Safety Officer will be responsible for all safety on the Site), their responsibilities, and authorities
- Proposed interaction and communication procedures between the Contractor's construction personnel and safety assurance staff
- Frequency and coverage of site safety meetings, and regular site safety reports
- Safety information and training
- Records to be prepared and maintained by the Safety Officer.

ii. **Measures for compliance by Subcontractors**

iii. Safety equipment and facilities

- Safety equipment, rescue apparatus and protective clothing which will be required for the Works. Such equipment shall include, but not be limited to, eye protectors, hearing protectors, safety harnesses, safety equipment for working underground and in confined spaces, rescue equipment, fire extinguishers, first aid equipment, lanyards, hard hats and, where appropriate, associated shock absorbers, chest harnesses
- Testing, inspection, and replacement of safety equipment, scaffolds, guardrails, working platforms, hoists, ladders, and other means of access, lifting, lighting, signing, and guarding equipment
- Operation and equipment of the specified first aid station
- Emergency Response plan (Roles and responsibilities, emergency response procedure, and emergency communication system.
- Any other equipment, gear, and facilities necessary for the prevention of accidents
- Protection of authorized and unauthorized visitors to the site (including people from the vicinity)

iV. Supervision of Safety Systems

The means by which the safety systems will be supervised, monitored, and audited by the Safety Officer to ensure due compliance with the principles and objectives of the Health and Safety Plan; Procedures for updating the Health and Safety Plan

i. Safety of Construction Methods

Proposals to ensure that construction methods do not compromise the Contractor's commitment to the Health and Safety Plan or his compliance with regulations

ii. Types of Hazards and Emergency Measures

An appreciation of the industrial health hazards and proposals for the minimization of the risks associated with such hazards.

iii. Personal Health and Sanitation program, which focuses on measures to be adopted by the Contractor in the worker's camp to ensure that the health of every personnel hired in the Project is properly taken care of. This program includes the following:

a) Installation of a temporary workers' camp that is provided with sleeping quarters, sanitary toilet and shower rooms, adequate potable water supply, and lighting facilities
   - Location for worker camps shall be approved by the Engineer and comply with guidelines and recommendations issued by the CEA/local Authority.
   - Worker camps should be located 200 m away from waterways or the site of religious, cultural, or archeological importance, or near schools

b) Personal hygiene and sanitation training for workers;

c) Orientation on the prevention of communicable diseases, including sexually transmitted diseases

d) Prevention of vector-borne diseases.

e) Prevention of the use of alcohol, drugs, possession of knives or other weapons by the contractors' and subcontractors' employees working or accommodated at the site

f) For foreign workers, an orientation on local customs and traditions.
   - Worker camps shall be provided with appropriate facilities for disposal of solid waste and sewerage.
   - Garbage bins shall be provided in the camps and regularly emptied.

The design and location of the worker's camp are subject to the approval of the Engineer and local authorities.

2003.3 Safety Officer

(a) Within 7 days after the commencement date, the Contractor shall appoint a Safety Officer whose duties throughout the period of the Contract shall be exclusively connected with Safety activities on the Site.

(b) At each site, someone has to be responsible for day-to-day Health and Safety issues.

(c) The Safety Officer shall be a suitably qualified and experienced person who shall supervise and monitor compliance with the Health and Safety Plan and shall carry out auditing of the operation of the Health and Safety Plan in accordance with a rolling program to be submitted, from time to time, to the Engineer for his approval.

(d) The Safety Officer's selection shall be subject to the Engineer's approval.

(e) The Contractor shall provide the Safety Officer with supporting staff in accordance with the staffing levels set out in the Health and Safety Plan.

(f) The Contractor shall empower the Safety Officer and his staff to instruct employees of the Contractor and of its Subcontractors to cease operations and to take urgent and appropriate action to make safe the Site and prevent unsafe working practices or other infringements of the Health and Safety Plan or regulations.

2003.4 Child Labor and Forced Labor

In order to protect children from jeopardy to their health, safety, or morals, ensure that age limitations specified in Labor regulations will apply and not be limited to the Employment of Women, Young Persons, and Children Act. Law Nos, 29 of 1973 and amendments.

2003. 5 Dengue and COVID -19 preventive measures (this is applicable if Notification on Covid -19 epidemic/ endemic is issued by Health Authorities Sri Lanka)

The contractor shall follow controlling mechanisms on COVID-19 and Dengue as per the "HEALTH AND IMMUNITY ENHANCEMENT GUIDELINES FOR COVID -19 and DENGUE, CIDA Health Guidelines for Construction Industry Version 4(Revised) CIDA, January 2021

- The Contractor shall ensure that there is a set number of workers as per the guidance as well as in labor camps, to prevent overcrowding and to allow social distancing.
- The Contractor shall at all times, ensure proper handwashing and sanitation facilities are available on the site.
- Measures should be in place to undertake daily temperature checks of workforce and enable social distancing at the work site, and interactions with communities should be minimized.

2003.6 Safety Reports and Notification of Incidents

(a) Safety Reports

The Contractor shall submit regular site safety reports to the Engineer as a requirement of the Project Health and Safety Plan. A summary report shall be submitted as part of the Monthly Progress Report. Prior to submission, the Contractor's Representative shall endorse the Report. Site safety reports shall comprehensively address all relevant aspects of site safety and industrial health regulations and, in particular, report on all site safety audits undertaken during the period covered by the report.

(b) Notification of Incidents

i. Illness/Accident/ any other Noticeable event

- The Contractor shall notify the Engineer immediately when any accidents occur whether on-site or off-site in which the Contractor, his personnel, or Contractor's Equipment, or those of his Subcontractors are directly or indirectly involved and which result in any injuries to any persons.

- Such initial notification may be verbal and shall be followed by a written comprehensive report in the format approved by the Engineer within 24 hours immediately after the accident.

- Should a Health & safety incident (Eg. if a worker is diagnosed with symptoms related to the Covid 19 pandemic or diagnosis of positive for Covid 19 on a test) or any other communicable

disease occur during the construction phase, the Contractor shall immediately inform the PHI and follow instructions laid out by the national health agencies.

- Immediately take appropriate actions to minimize any impact and prevent the spread, and inform the Engineer of the incident.

2003.7 Safety Equipment and Clothing

The Contractor shall ensure that safety equipment and protective clothing as described in the Health and Safety Plan are available on the site at all material times and that measures for the effective enforcement of proper utilization and necessary replacement of such equipment and clothing are incorporated into the Health and Safety Plan.

(a) The Contractor shall provide all authorized persons on the Site (including the Employer's and Engineer's personnel) with protective clothing, where the minimum items (Personnel Protective Equipment-PPE) shall be as follows;

i. protective headgear (hard hat or similar),
ii. a reflective jacket
iii. safety boots (with steel toe caps and steel sole plate)
iv. Other items such as safety glasses, gloves, safety harness, rubber boots etc. will be provided as necessary to the operation being undertaken.

(b) The Contractor shall provide other necessary safety equipment, clothing and facilities as instructed by the Engineer.
The contractor shall provide all persons of sub-contractors with Personal Protective Equipment (PPE)

C) A vehicle is available at site for emergency matters.

2003.8 Safety Inspections

The Contractor shall regularly inspect, test and maintain all safety equipment, scaffolds, guardrails, working platforms, hoists, ladders and other means of access, lifting, lighting, signing and guarding equipment. Lights and signs shall be kept clear of obstacles and legible to read. Equipment, which is damaged, dirty, incorrectly positioned or not in working order, shall be repaired or replaced immediately.

2003.9 First Aid Facilities

The Contractor shall establish, maintain at least one fully equipped first aid box at each Location prior to start the any activities at each site. All provided facilities should be maintained during construction at site.

2003.10 Health and Safety Information and Training

The Contractor shall ensure that safety, rescue and industrial health matters are given a high degree of publicity to all persons regularly or occasionally on the Site. Posters, in Sinhala, Tamil and English languages, that draw attention to site safety, rescue and industrial health regulation, shall be made or obtained from appropriate sources, and shall be displayed prominently in strategic areas within the Site.

The Contractor shall carry out regular safety training courses, the frequency, coverage and application of which, shall be in accordance with the Health and Safety Plan.The Contractor shall require all Subcontractors' employees to participate in relevant training courses appropriate to the nature, scale and duration of the subcontract works.

The Contractor shall carry out a training session on First Aid by contacting the Sri Lanka Red Cross.

The Contractor shall carry out monthly general meetings and give out safety awards to deserving laborers employed in the project, as motivation for all to be more safety-conscious.

2003.11 Plant, Equipment, and Qualified Personnel

All construction plants and equipment used on or around the Site shall be fitted with appropriate safety devices. These shall include, but not be limited to:

(a) Effective safety catches for crane hooks and other lifting devices,

(b) Functioning automatic warning devices and, where applicable, an up-to-date test certificate for cranes and hoists.

All construction plants and equipment used on or around the Site shall be operated by suitably qualified personnel.

2003.12 Measurement and Payment

a) Measurement

Provisional Sum is allocated in the Bill of Quantities for conducting an awareness programme for Sexually Transmitted Diseases (STDs). The amount allocated for this Provisional Sum shall not be exceeded without prior approval of the Engineer.

All the costs related to the implementation and execution of Health and Safety shall be measured in months during which they are carried out to the satisfaction of the Engineer.

b) Payment

Payment to the Contractor for the preparation and implementation of the STD program shall not exceed the Provisional Sum indicated for this purpose. Payment shall be based on the rates and sums assessed and agreed by the Engineer for the completed works to the satisfaction of the Engineer, which shall include full compensation for providing all materials, labour, tools, equipment and incidentals necessary to carry out the work.

Payment for health and safety measures during the construction period shall include all costs necessary and required for the proper implementation of the Project Safety and security in compliance with the safety plan, and also in compliance with the requirements of this Specification, including updating, monitoring and submitting monthly.

The Engineer may at any time withhold payments if, in his opinion, the Project Safety has not been provided in due compliance with the requirements and procedures of this Specification.

Pay Item	Description	Pay Unit
2003 (1)	Health & Safety measures during construction conforming to the latest industrial standards	Month
2003 (2)	Awareness Programme for STDs, Session on Gender -Based Violence	Provisional Sum
2003 (3)	Awareness Programme for First Aid	Provisional Sum

2004 CONSTRUCTION CONTRACTORS' REQUIREMENT TO COMPLY WITH SITE SPECIFIC ENVIRONMENTAL, SOCIAL MANAGEMENT AND HEALTH AND SAFETY DURING THE CONSTRUCTION PHASE

Given bellow is the construction contractors' requirement to comply with site specific environmental, social and health and safety management in each site. The contractor should propose measures to mitigate the impacts during the construction phase as required by the ESMP. The contractor is expected to address all sections of ESMP adequately with the indicated level of relevance in his bid response by referring to given information..

Table .1. Summary table on construction contractors' requirement to comply with Site Specific Environmental, Social and Health and Safety Management during the construction phase

Reference No. as per construction contractors obligation to ESMP	Item	Relevance to the site Package 10W
2002 Environmental and Social Monitoring		**Failed slopes nearby Pathanpaha Sub-Station, Matale Line (Site No. 254)**
2002 .2 1)	Storage on site	Highly Relevant (railway tracks, and sub road)
2002 .2 2)	Noise and vibration	Highly relevant (nearby community)
2002 .2 3)	Cracks and damages to the buildings	Not relevant
2002 .2 4)	Disposal of waste	Relevant (nearby community)
2002 .2 5)	Disposal of refuse	Highly relevant (nearby community)
2002 .2 6)	Dust control	Highly relevant (nearby community)
2002 .2 7)	Transport of construction materials and waste	Relevant
2002 .2 8)	Water	Relevant
2002 .2 9)	Flora and Fauna	Highly relevant
2002 .2 10)	Physical and cultural resources	Not relevant
2002 .2 11)	Soil erosion	Relevant
2002 .2 12)	Soil contamination	Relevant
2002 .2 13)	Borrowing earth	Relevant
2002 .2 14)	Quarry operations	Not relevant
2002 .2 15)	Maintenance vehicles and machinery	Relevant
2002 .2 16)	Disruption to public	Highly relevant (nearby community)
2002 .2 17)	Utilities and roadside amenities	Highly relevant
2002 .2 18)	Visual environment enhancement	Relevant
A-2002-5 Environmental Monitoring	Baseline surveys (air, water, noise, vibration, crack surveys)	Refer to the site-specific monitoring plan
	Surveys during construction (air, water, noise, vibration, crack surveys)	Refer to the site-specific monitoring plan
	Surveys during operation phase	Refer to the site-specific monitoring plan
	Reporting and maintenance of records	Relevant
2003.2	Safety organization and communication	Highly relevant (unsafe slope, heavy machinery)
2003.3	Child labor and Forced labor	Relevant

2003.4	Safety reports and notification of accidents	Highly relevant
2003.5	Safety equipment and clothing	Highly relevant
2003.6	Safety inspections	Highly relevant
2003.7	First aid facilities	Highly relevant
2003.8	Health and safety information and training	Highly relevant
2003.9	Plant equipment and qualified personnel	Relevant

Table 2: highly site specific ESMP requirements

Failed slopes nearby railway line from Wattegama to Pathanpaha, Matale Line (Site No. 254)

i. Avoid accidents / possible emergencies during construction

Safety officers are highly recommended to each mitigation location. Always be alert on the NBRI warnings regarding landslides. An awareness and training programme on safety for the construction workforce, and railway station staff are compulsory.

ii. Traffic management and safety

Traffic management system should be in place day and night. A good traffic management plan should be prepared with the concurrence of Sri Lanka Railway Department as site no.254 located at railway track from Wattegama to Matale. Proper rail road safety measures should be included with warning signs and permanent trained watchmen, luminous sign boards indicating instability risk and road obstruction signs, night lamps etc. are strongly recommended at these sites. Flagman of the Railway Department is responsible signalling the in and out trains through the stations according to the requirements of the construction activities.

iii. Priority Health and Safety Issues

As the workers in the site have to work in high-risk conditions, it is imperative to implement recommendations given in section 2003 of contractors' obligation on ESMP under "working conditions and community health and safety". These recommendations should be followed carefully in a proper organization and safety monitoring system.

i. Prepare a special Occupational Health and Safety Management Plan prior to commencement of construction activities
ii. A good warning system, watchman and fulltime flagman of the Railway Department is highly recommended for these sites for both worker and commuter safety.
iii. Adoption of standard worker safety methods
iv. Provision of personal protective equipment (PPE) such as safety boots, helmets, protective clothing goggle etc.
v. Provision of trainings and awareness programs to employees
vi. Conducting hazard analysis and plan/provide adequate mitigation measures for such hazards identified, prior to carrying out major construction activities
vii. If the wasp nest is in the vicinity, it is mandatory to use Evacuation Centres for ensure of workers' safety
viii. Additionally, work should be discontinued for sufficient time period during rainy period as working on unstable land will be highly risky in the rainy season.

iv. Transporting materials and machineries

Inform and take permission from the authorized person of SLR before any material and machinery transportation through / along the railway tracks running very close to the affected area.
The nearby community and workers should be informed about the material and machinery transportation schedule. The railway station platform, railway tracks and pillars must not be damage due to the material and machineries transportation.
Access road at LHS of the railway line near to Pathanpaha sub-station and site no.254 (nearby 13M 48CH) can be used for material and machineries transportation.

v. Impacts on railway transport infrastructure

Usually, residents ride bicycles and three wheelers along the railway line nearby site no. 254. Therefore, avoiding damages to railway infrastructures by vehicles and to avoid inconveniences for material transportation and machinery, a good traffic control should be implemented in the construction stage. Any deformities in the railway tracks due to construction activities should be monitored day and night by the watchman placed in the proposed mitigation site.

vi. Throw out disposals (litter, bottles, and food) to the construction site.

Display sign board for avoiding the waste gathering around these mitigation site.

vii. Inundation of the railway tracks

During the construction, the water inundation of the railway tracks will be expected. To mitigate this impact, contractor should construct temporary surface and sub surface drainage network directing excess water to nearby stream or canal before start of the construction.

viii. Minimize erosional impacts during construction

It is recommended that mitigation works involved with site clearance, slope reshaping, removal of debris etc. are avoided during rainy season. Therefore, it is imperative those site work in slope mitigation is carried out in the dry season and avoid such activities on slope area in the wet season as much as possible. This should be considered in project planning stage. Silt traps should be introduced to cut down sediment laden runoff.

ix. Invasive species

Should be avoided in using vegetative erosion control structures. Native plants in the local environment should be chosen for vegetative control. The species used for vegetative control measures need approval from the relevant authorities.

x. Noise and vibration control

The noise and vibration generating activities may disturb the smooth flow of activities of nearby houses. Vibration-generating activities should be done within the prescribed limits to avoid damage to structures. Suitable compensation should be made if damage cracks due to construction work occur in the houses and infrastructure.

xi. Disposal of construction waste

The contractor should pay special attention with respect to disposal of construction waste. This site is located within a public place in a rural landscape with a pleasing environment. Therefore, such waste if generated should store properly without getting washed off and dispose according to approved procedures by the PMU. Construction waste should not dispose along railway tracks.

xii. Onsite sanitary facilities for the workers

The contractor should prepare temporary sanitary facilities for the workforce within the site, to mitigate open defecation of the workers.

xiii. Dust and aerosol control screens

Dust particles generated during the construction period can influence the railway staff of the station, pedestrians, and nearby community. The upslope ad downslope houses with occupants could be affected from generated dust particles. Special screens etc. should be used if heavy dust or aerosol generating activities are envisaged.

xiv. Water and electricity for construction

Water for construction should be obtained only from approved places. If the contractor intends to use electricity from the main electricity line, they should be informed and the required permission should be taken.

xv. Working hours, working in extreme weather conditions and working in poor visibility

The construction activities can be carried out at both day and night time. Working after 6.p.m. could be done after with the consent from Station Master due to safety issues.

xvi. Impact on service infrastructure

Telecommunication, electricity, water lines should be relocated before construction starts on per the approval of PMU.

xvii. During construction good housekeeping should be maintained to minimize visual pollution

xviii. Worker's code of conduct

Possible disputes between the labor force and the nearby community, staff of the station, should be prevented by maintaining the agreed code of conduct by the contractor.
Possible disputes between workforce and villagers should be avoided especially when using shared resources such as common bathing and washing places etc.

xix. Snake bites, toxic insect bite management and emergency management by accidents

Proper emergency management system for snake bites and toxic insect bite (include awareness on snake bites, safety shoes while at work, first aid on a snake bite, hospitalization and admission to correct hospital where snake bite management facilities are available) should be introduced.
Accidents are common in these kinds of sites. Proper emergency management unit for other accidents (first aids facilities, safety items, hospitalization facilities and transportation facilities) should be maintained for these sites.

xx. Emergency management of accidents

Accidents are likely in sites of this nature; therefore, a proper emergency management system shall be established and maintained throughout the construction period. This shall include first aid facilities, essential safety equipment, and trained personnel on site. Arrangements shall also be in place for rapid hospitalization and reliable transport facilities to ensure immediate response during emergencies.

xxi. Emergency Response Plan and community protection

The contractor for the project shall establish Emergency Response Procedures for the site, as it is located in a public place, to ensure a rapid, organized, and effective response to emergencies that may arise during construction activities.
Approval to be obtained for the Emergency Response Plan and to be communicated to the workers. Site-specific evacuation routes/warning systems if the slope threatens nearby communities or traffic should be established.

xxii. The occupants in houses identified as high risk by the NBRI

Should be alerted on NBRI warnings during rainy days. Currently operating warning dissemination procedure should be strengthened to ensure that occupants are responsive on alerts. The Environmental and Social unit of PMU should take to step to implement response mechanism.

xxiii. Removal of structures

Require consent from the land owners for this site works.

Table 3: Site-specific monitoring requirements

Monitoring requirement	**Parameters**	**Relevance to the site Package 10W** **Site No. 254**
1. Baseline monitoring	Water quality	-
	Pre crack survey for the buildings, houses	Once*
	Air quality	Once*
	Ground vibration	Once*
	Background noise measurement	Once*
	Micro habitat assessment	-
2.During construction	Water quality	During the rainy season if noticeable change in the appearance of water
	Crack survey of houses	If noticeable displacement is observed during construction **
	Crack survey/ Condition assessment for roads	Cracks in the roads within 50 m of the site & roads used for material & machinery transportation with video evidence.
	Ground vibration	During operation of drilling machinery, boring works, or any works that generate ground vibrations*
	Construction noise	Once a month during heavy noise generation times *
	Air quality particulate matter	Once a month *
3.Vehicular Emission		All machinery/vehicles operational should have the emission control test certificate as applicable - should be checked by the site ES officer of the consultant
4.Monitoring agency		* A competent independent monitoring agency with registration of Central Environmental Authority for all parameters except crack surveys
5.Reporting requirements		**Stream water quality** – Comparison with National Environmental (ambient water quality) regulations, no.01 of 2019 **Pre-construction crack survey of the high-risk buildings**-Professional report **Ground vibration**-as per the interim standards on vibration for the Machinery, Construction activities and Vehicular movements, CEA **Background noise measurement** –Extraordinary Gazette No.924.1, May 23,1996, CEA **Air quality particulate matter-** The National Ambient Air Quality standards stipulated under the Extraordinary Gazette, No. 1562/22 August 15, 2008 -Central Environmental Authority of Sri Lanka.

contractor is shall address all sections of ESMP adequately with the indicated level of relevance in his bid response by referring to given information.

APPENDIX C – SPECIFICATIONS BY RAILWAY DEPARTMENT OF SRILANKAN (SLR)

C1. GENERAL

C2. SAFETY PRECAUTIONS DURING THE PERIOD OF CONSTRUCTION ADJACENT TO THE RAILWAY TRACK:

C2.1 General

The Contractor shall solely responsible for the safety of the work site, railway properties, passengers, workers, machinery and equipment etc. As such, the Contractor shall take all precautions to avoid any loss, damage or accident at the work site.

The Contractor shall appoint a Railway Coordinating Officer for the purpose of continuous communication with the Sri Lanka Railways as per the appendix A. Railway Coordinating Officer shall be responsible for all railway related safety precautions, coordinating of arrangement of service trains, ensure uninterrupted train service and any other matters related to railway.

The Contractor shall inform following officers about the commencement date of a particular work site, at least two weeks before the mobilization with all details about the work site and continuous coordination shall be maintained throughout the construction period through the Railway Coordinating Officer.

i. District Engineer (Central or Upper District)
ii. Signal Engineer (Upper)
iii. Respective Inspector of Permanent way.
iv. Respective Signal Inspector.
v. Nearest Railway Station Masters.

The respective Inspector of Permanente Way will provide sufficient number of flagmen as per the request of the Contractor. However, the Contractor shall bear the cost of the flagmen.

It is the responsibility of the Contractor to enlighten his staff about the Train Time Table.

The Contractor's site staff shall study and be well conversant with the Minimum Structure Gauge and the Maximum Loading Gauge as shown in the APPENDIX C – 2.

Material and equipment that are temporary stored adjacent to the existing railway track shall be so placed and the work at all times shall be executed without any disruption to the train service.

The Contractor shall provide and maintain during the period of construction all safety devices including Traffic Signs, Barricade tape, Warning Boards and Lighting Devices etc. at all locations where the work is in progress.

The Contractor will not be permitted excavation/ trimming of slopes very close to the railway track which may create danger to the train service. In such cases, suitable temporary protection measures should be taken by the Contractor with the approval of the Sri Lanka Railways.

C2.2 Temporary Level Crossings

The Contractor shall identify the requirement of level crossings well in advance. He shall inform his requirement to the respective Inspector of Permanent Way with copy to the District Engineer. The Inspector of permanent Way will construct the temporary level crossings and arrange to man the gates immediately after making the due amount to the Sri Lanka Railways by the Contractor.

However, it is the duty of the Contractor to supply and fix the gates and remove them at the completion of the work site. The Inspector of Permanent Way will remove the temporary level crossings at completion of the work.

C2.3 Imposing Temporary speed Restriction

During the entire construction period, speed restrictions have to be in force. For this purpose, temporary speed restriction boards should be erected at distances specified in paragraph 19.11 of the Manual of Special Rule of the Way & Works Department as mentioned below and as shown in the Figure C - I.

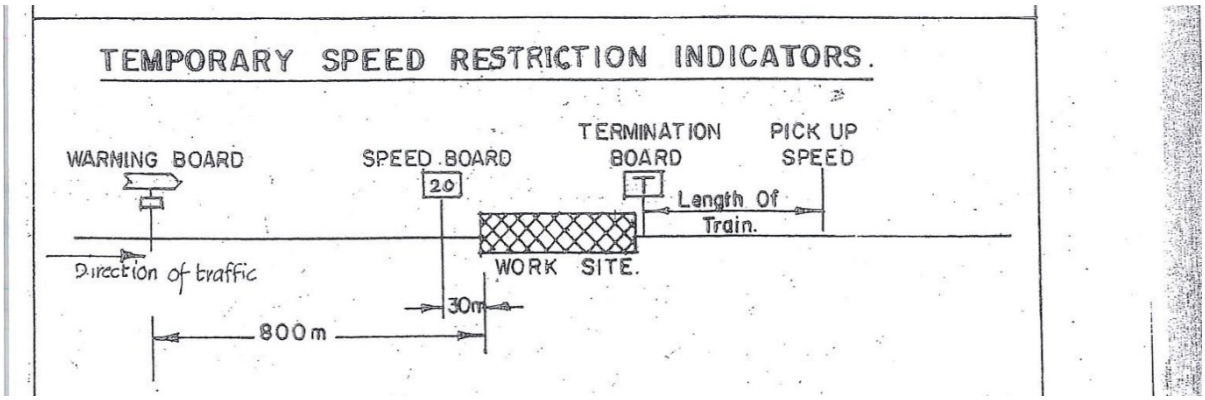

Figure C - I

19.11.1 The temporary speed restriction boards consist of a warning board, a speed board / stop board and a termination board.

19.11.2 These boards are fixed at a height of around 2m (6') for easy visibility, letters and figures on warning boards, speed boards and termination boards should be at least 25 centimeters (10 inches) high and painted with luminous paint.

19.11.3 They are fixed at distance as shown in Figure C - I

19.11.4 These boards be brought into use only after due notice has been given in the weekly or other notices indicating position of boards, the places to which they refer and the nature of work they are intended to protect.

19.11.5 <u>Warning Board</u>
The Warning Board is a fish tailed horizontal board painted Green with a White horizontal stripe in the middle. The post carrying the Warning Board also displays in figures the restricted speed ahead in kmph or mph. It is placed to the left of the direction of traffic at a distance of 800 m (1/2 mile) ahead of the checked length. (Figure C – II)

On the section where maximum speed of trains is limited to 32 kmph (20mph) the board may be placed at a distance of 400 meters (1/4 mile). These should be fixed so as to be clearly visible to drivers. On passing Warning Boards drivers must reduce speed.

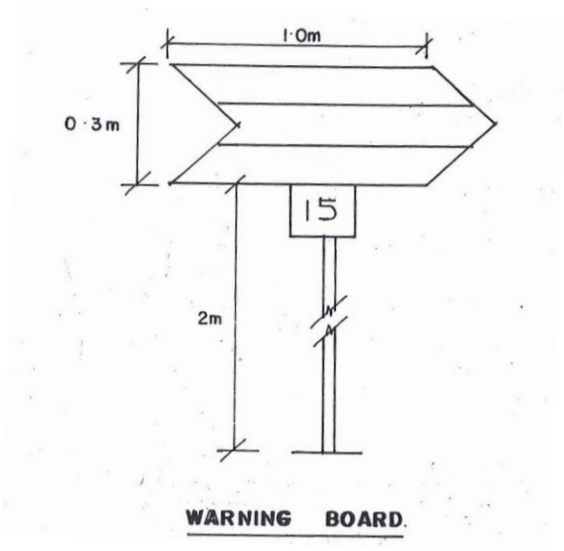

Figure C - II

19.11.6 Speed Board

Temporary Speed Restriction Board is a square board painted white with the restricted speed painted in red letter. The board should be of size 0.6m x 0.6m (2' x 2').

These should be placed at 180m (200 yards) – train length ahead of the point from which the speed restriction commences, it is placed to the left of the direction of traffic (Figure C – III).

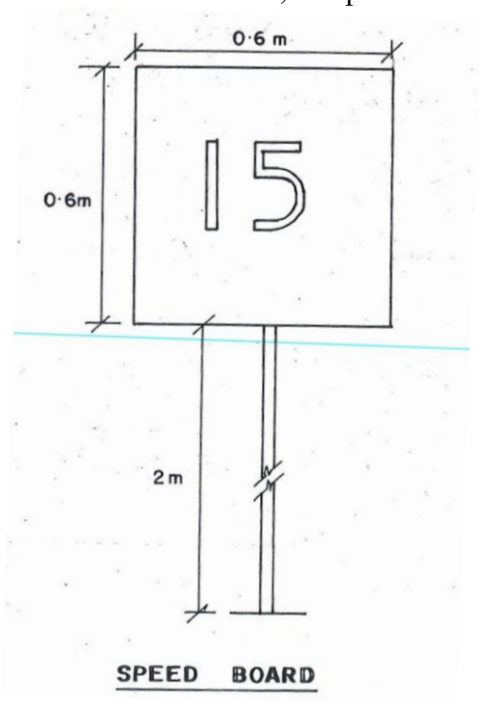

Figure C - III

19.11.7 The Stop Board

The Stop Board is a rectangular board 0.6 m x 0.3 m (2' x 1') painted Red with 2 vertical white stripes; it is used as an alternative to speed board only where trains are to be stopped. It is fixed at a distance of 30 m (100') from the commencement of the restriction in the similar position as the speed board (Figure C – IV).

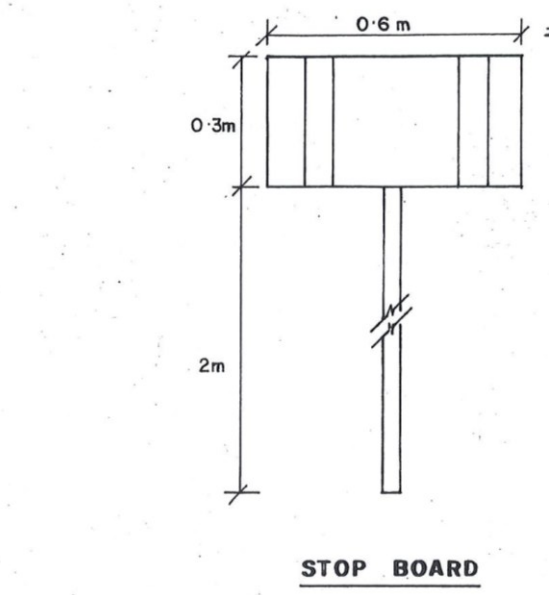

Figure C - IV

19.11.8 Termination Board

The Termination Board is a square of size 0.6 m x 0.6 m (2' x 2') painted white with the letter 'T' in black. It is placed at the end of the checked length to the right of the direction of traffic (Figure C – V).

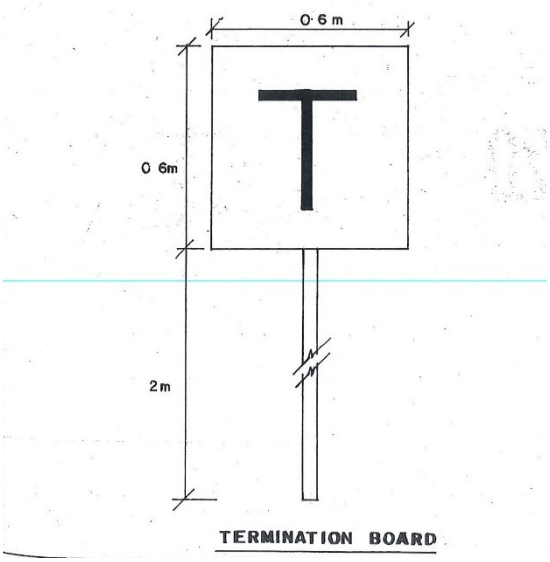

Figure C - V

C2.4 Protection at Work site

The work site should be protected in accordance with the provisions specified in paragraph 19.10 of the manual of Special Rule of the Way & Works Department as mentioned below and as shown in the Figure C - VI.

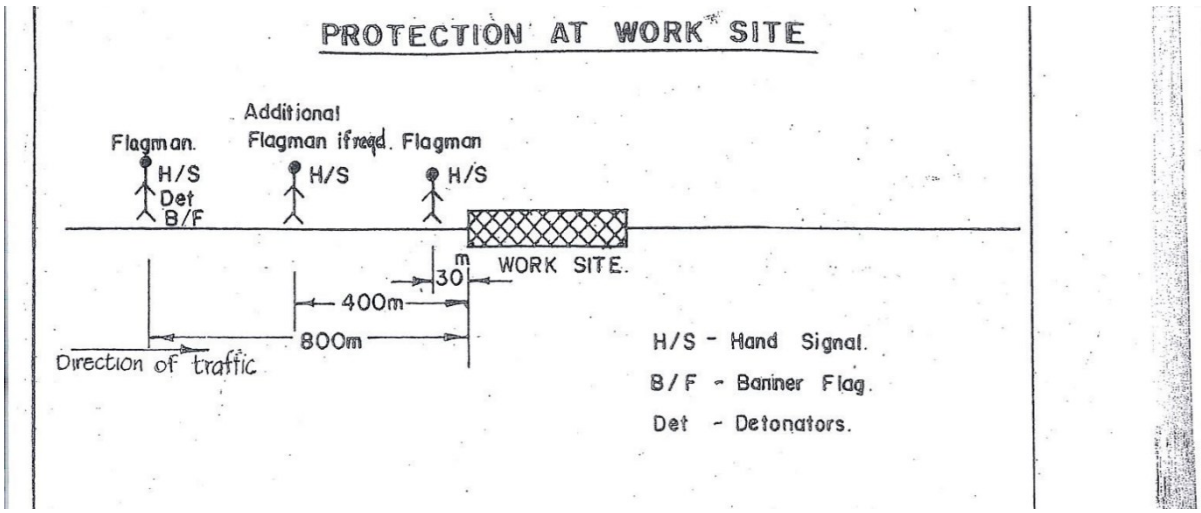

Figure C - VI

19.10.1 Work sites involving danger to workmen and trains should be protected with hand signals, banner flags and detonators.

19.10.2 Distance at which hand signals, banner flags and detonators are to be used to protect a work site are illustrated in Figure C - II. Hand signals are used in conjunction with banner flags and detonators when a work is in progress and unsafe condition exist. These are deployed as below:

(a) (i) A flagman with hand signals (Red & Green) and detonator is positioned at 30m (100') from the work place.
(ii) Another flagman with hand signals, banner flag and detonators is positioned at 800 m (1/2 mile) from the work place, or 400m (1/4 mile) as the case may be.
(iii) The detonators must be placed 100m away from the banner flag in the direction of approaching traffic.

(b) On signal line, and colour light territory the line must be protected as in (a) above on both sides of work.

(c) The work should be so regulated as to avoid stopping a train on a continuous rising gradient if possible.

(d) When it is necessary to stop a train, all the flagmen should display danger signals.

(e) When a train can be allowed to proceed cautiously, the farthest flagman should exhibit a caution signal.

19.10.3 Only regular and competent persons should be used as flagmen. Flagmen should have knowledge of safety rules for protecting track, which should be frequently tested.

C2.3 Permanent Speed Restriction Indicators

19.12.1 Permanent speed restrictions are printed in the Working Time Table – Part I and all Permanent Way officials, must be familiar with the same.

19.12.2 Permanent speed restriction indicators consist of a caution board, a speed board and a termination board which should be erected at distances as illustrated in Figure 3.

19.12.3 Caution Board

The caution board is a square board of size 0.5 m x 0.5 m (1'-6"x 1'-6") painted white. It bears a letter 'C'; in the centre of the letter 'C' the restricted speed is inserted in small figures. This board is erected at a suitable braking distance from the restriction, but not less than 200 m (600') from the commencement of the check.

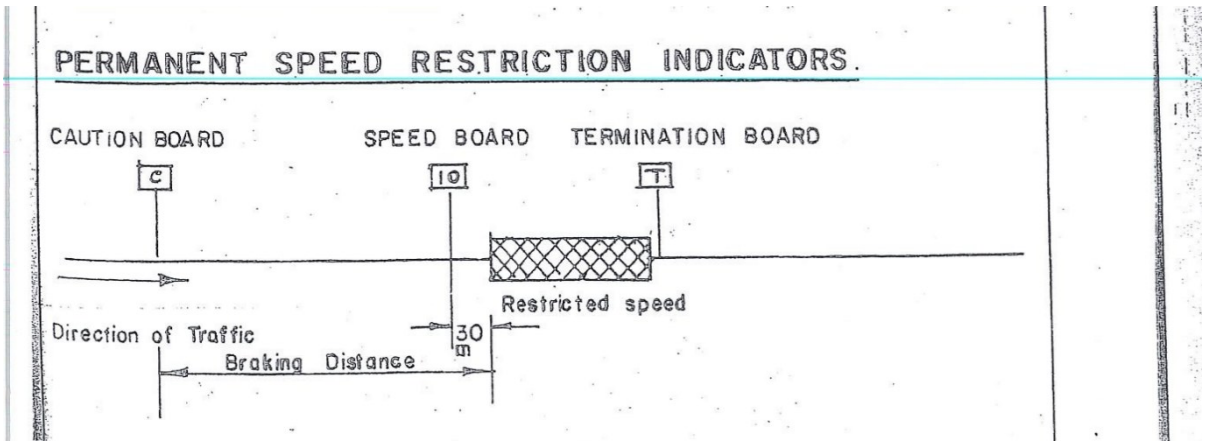

Figure C - VII

19.12.4 Speed Board

The permanent speed restriction board is a square board of size 0.5 mx0.5m (1'-6'' x 1'-6'') painted white with the restricted speed painted in black in kmph (mph) e.g 15,20,40 etc. It is erected at the commencement of the restriction.

19.12.5 Restriction Termination Board

It is a square board of size 0.5mx0.5m (1'-6'' x 1'-6'') painted white with the letter 'T' in black. It is erected at the termination of the restriction. Drivers should pick up speed after ensuring that whole of the train has crossed this board.

19.12.6 On single line, these boards should be erected for both directions.

19.12.7 The ''C' and speed boards are placed to the left of driver; the 'T' board is erected to their right. This arrangement enables the backside of speed board being used as 'T' board and backside of 'T' board being used as speed board for the other direction on the single line.

19.12.8 The restrictions would remain for a long time. As such the board are constructed and erected in a manner so as to remain fixed permanently. When not visible clearly they should be cleaned and repainted.

19.12.9 The boards fixed at a height of round 2 m (6') for easy detection by drivers and kept free from vegetation, which may obscure them.

19.12.10 Where permanent applies only to a particular or loop or crossover etc. these are painted below the speed indicator on the speed indicator board as 'Loop', 'Crossover' etc.

19.12.11 In multiple lines where the boards cannot be erected between the track, an indicator is placed at rail level between the tract, showing the restricted speed.

19.13 Other Indicator Boards

19.13.1 Whistle Boards

19.13.1.1 Whistle Boards are shaped as a diamond, painted RED with a WHITE central horizontal strip (Figure C – VIII).

19.13.1.2 They are used as warning to drivers that they are approaching a level crossing or a gang of men working on the line. For level crossings they are permanently fixed, for gang work portable boards are used.

19.13.1.3 Drivers are to give a loud whistle on sighting the whistle board to warn of the approaching train during day as well as night.

19.13.2 Flood Boards

19.13.2.1 These are large triangular board with the words 'BEWARE FLOODS' on the front and black arrow mark on the back (Figure C – VIII).

19.13.2.2 These are fixed at locations, which are prone to flooding. Drivers are to keep a sharp lookout at such locations.

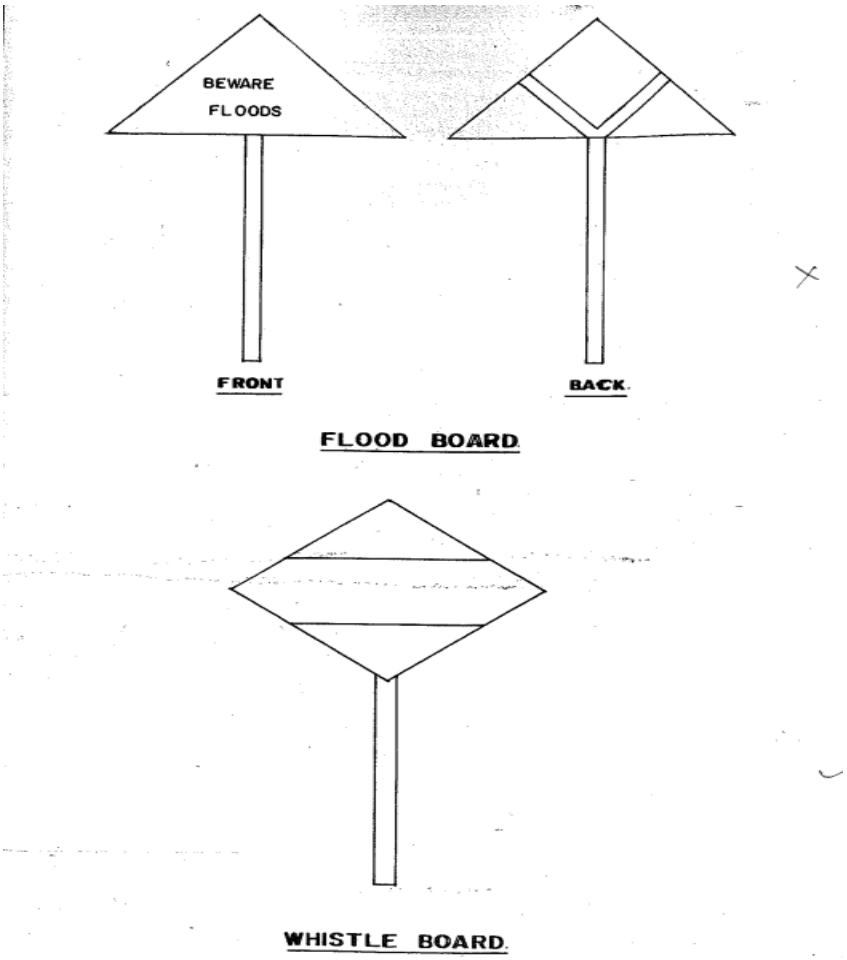

Figure C - VIII

APPENDIX C - 1: Technical Specification for Track Ballast

1.0 General :

i. Basic Quality: Ballast should be hard, durable and as far as possible angular along edges/corners, free from weathered portions of parent rock, organic impurities and inorganic residues.

ii. Particle shape: Ballast should be cubical in shape as far as possible individual pieces should not be flaky and have generally flat faces with not more than two rounded/sub rounded faces.

iii. Mode of manufacture: Ballast shall be machine crushed.

iv. Physical prosperities: The Ballast should satisfy the following physical properties in accordance with IS:2386 Part JV -1963 when tested.

SI. No.	Type of Test	Limits
1	Aggregate Abrasion value	30% Max .+
2	Aggregate Impact value	30% Max .+
3	Water Absorption	1.00%

v. Size and Gradation :

The Ballast should satisfy the following size and gradation:

	Size and Gradation of Ballast	
SI. No.	**Size of Sieve**	**% Retained**
1	Retained on 65 mm Sp. mesh Sieve	5.00 % Maximum
2	Retained on 40 mm Sp. mesh Sieve	40% to 60%
3	Retained on 20 mm Sp. mesh Sieve	Not less than 98.00%

The Ballast stacks not confirming to above requirements shall be rejected.

2.0 Method of Sieve Analysis:

i. The screen for sieving the ballast shall be of square mesh and shall not be less than 100 cm in length,70 cm in breadth and 10 cm in height in sides.

ii. The percentage passing through or retained on the sieve shall be determined by weight. The required numbers of screens weigh balance and man power etc. required for performing the tests shall be arranged by the contractor at his own cost.

iii. Sieve Analysis to be submitted for every **250 cubes** of ballast.

3.0 Sampling and Testing:

i. A minimum of three (03) samples of v\ballast for sieve analysis shall be taken for measurement done on any particular date even if the numbers of stacks to be measured are less than three.

ii. The tests viz. determination of Abrasion Value, Impact Value and Water Absorption should be got done through approved laboratories.

APPENDIX C – 2: SRI LANKA RAILWAY MINIMUM STRUCTURE GAUGE, MAXIMUM LOADING GAUGE & STANDARD DIMENTIONS

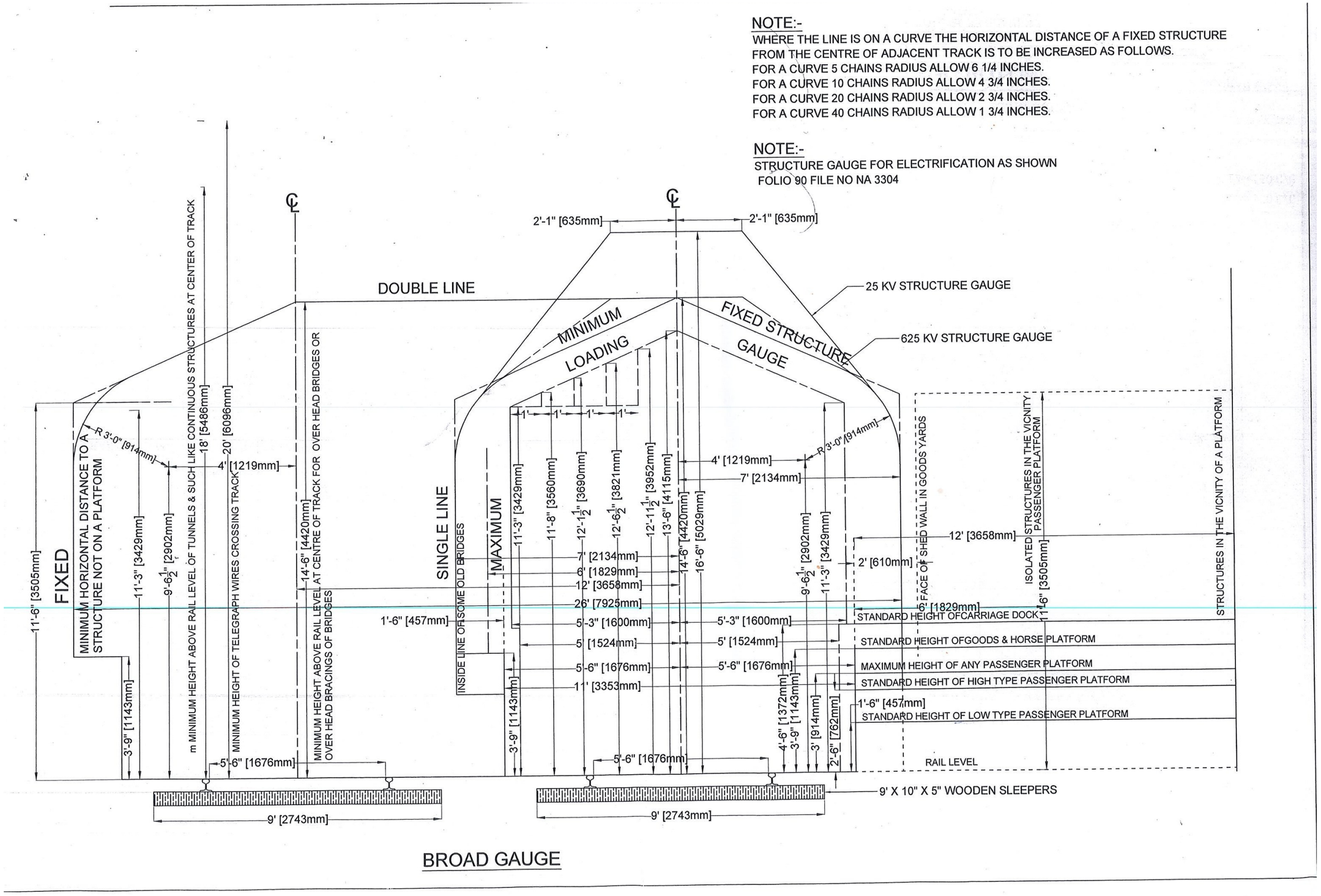

DRAWINGS

The following listed drawings are annex as Annex – A in the Tender Document:

Mitigation Design for Failure Locations along Main Line Due to 'Ditwah' Cyclone Line (From Wattegama to Ukuwela) in Matale District (Site No. 254) Under Package 10W of Reduction of Landslide Vulnerability by Mitigation Measures Project (RLVMMP)